Index

Product Catalog

002 - 003 about - Acerca de

004 - 005 applications chains - cadenas de aplicaciones

007 - 039 metal chains - cadenas de metal

041 - 103 plastic chains and belts - Cadenas, cinturones de plastico

104 - 139 magnetic corner tracks - Pistas magneticas de esquina

141 - 237 accessories - accesorios

- sprockets - piñones

- corner tracks, straight tracks - Pistas de esquina, Pistas rectas

239 - 243 chain sizing - Tamaño cadena

244 - 249 contents - contenido

250 - 251 conditions of sale - condiciones de venta

Catalog

ED 01

MakesMoving





about

EXPERIENCE

prides itself on nearly fifty years of experience as one of the leader manufacturer of hinged slat chains and accessories in steel/stainless steel and thermoplastic resin for conveyor belts used in packaging, bottling, glass, pharmaceutical, chemical, food, mechanical industry, etc.

Nowadays, the **team** continues this activity exporting all over the world through a qualified network of agents and distributors and also a short delivery time is granted through a warehouse containing large quantities of the most required items (up to 1.000 metres each chain type); non-stock and tailor-made orders can be supplied in short term.

product range

ITALIAN MANUFACTURE

The choice of chain materials has been specifically studied by skilled specialists and developed in cooperation with the main stainless steel and thermoplastic manufacturers, as far as the final performance is granted by chain tests which strictly conform to international regulations, e.g. careful inspections carried out during all the stages of production, whose quality is constantly supported by technological researches.

production range for conveyor belts includes:
- Steel/stainless steel hinged slat chains and belts;
- Thermoplastic hinged slat chains and belts.
- Sprockets and idlers, curves, magnetic corner tracks guide rails profiles, accessories and components in thermoplastic resin.



On-Line
A continuous technological innovation is fundamental for Magris. We apply this value to the technical properties of our products, to the technologies that we use and develop, to the industries that we supply and also to the service level that we dedicate to our customers.

On our website you will always find updated information on our products and you can download all our **catalogues** and **software**.

Catalog

ED
01

applications / metal chains

material chains

PRODUCTS	APPLICATIONS	Stainless Steel Ferritic AISI 430 SS Series	Stainless Steel Hard Inox SSH Series	Stainless Steel Hard Inox rubberized SSH G Series	Stainless Steel HQ W.1.4589 SSX Series	Stainless Steel Austenitic AISI 304 SSA Series	Stainless Steel Austenitic AISI 316L SSAA Series	Carbon Steel S / SC Series	Gripper 1874 GV Series
FOOD BEVERAGE GLASS BOTTLING APPLICATIONS	Depalletizer		■						
	Inliner / Combiner		■		■				
	Mass conveyors	■	■		■	■			
	Accumulations	■	■						
	Sterilizer / Rinser Elevators / Loweretors								■
	Incliner conveyors			■					
	Infeed packaging machines	■	■						
	Packaging machines	■	■			■			
	Packaging products conveyors	■	■						
GLASS NO-RETURNABLES BOTTLES	Depalletizer	■							
	Inliner / Combiner	■	■		■				
	Mass conveyors	■	■						
	Accumulations	■							
	Sterilizer / Rinser Elevators / Loweretors								■
	Palletizer								
	Blowing machines								
	Incliner conveyors			■					
	Infeed packaging machines	■	■						
	Packaging machines	■	■						
	Packaging products conveyors	■	■						
DETERGENTS COSMETICS CHEMICALS PHARMACEUTICAL	Standard conveyors					■	■		
	Mass conveyors					■	■		
AUTOMOTIVE MECHANICAL IND.	Standard conveyors		■					■	■
	Mass conveyors		■						

applications / plastic chains

material chains

PRODUCTS	APPLICATIONS	Acetal LFA / WLF	Acetal SP	Acetal SL	Acetal Aramidic fiber AK	Polyam-mide WRX	Acetal AS	Polypro-pylene PPB	Polyester PBT	Polyester HT	Rubber Top	Gripper	LBP	Biplanar
CANS	Depalletizer		■		■									
	Inliner / Combiner		■		■									
	Mass conveyors		■		■									
	Accumulations		■		■									
	Sterilizer / Rinser Elevators / Loweretors											■		
	Incliner conveyors										■			
	Infeed packaging machines		■		■									
	Packaging machines		■		■						■			
	Packaging products conveyors		■		■									
PET BOTTLES FOOD BEVERAGE APPLICATIONS	Depalletizer		■		■									
	Inliner / Combiner		■	■	■									
	Mass conveyors	■	■	■	■									
	Accumulations	■	■	■	■									
	Sterilizer / Rinser Elevators / Loweretors													
	Incliner conveyors										■			
	Infeed packaging machines		■		■									
	Packaging machines	■	■		■				■	■	■			
	Packaging products conveyors	■	■		■								■	
GLASS BOTTLES PRODUCTION	Inliner / Combiner				■	■								
	Mass conveyors				■	■								
	Accumulations				■	■								
	Sterilizer / Rinser Elevators / Loweretors											■		
	Palletizer				■	■								
	Blowing machines											■		
DETERGENTS COSMETICS PHARMACEUTICAL	Standard conveyors				■		■	■	■					
	Mass conveyors						■	■	■					
AUTOMOTIVE MECHANICAL IND.	Standard conveyors		■	■	■	■				■				
	Mass conveyors													
DAIRY IND.	Standard conveyors													■

Every care has been taken to ensure the accuracy of the information contained in this catalogue
but no liability can be accepted for any errors or omissions.

Adeptrans Cadenas y Transmisiones S.L.

Metal Chains ED01

MakesMoving

916 926 286 · info@adeptrans.es

materials

slats

HARD INOX
Special work hardened, chrome-nickel, highly wear corrosion resistant stainless steel. It offers excellent mechanical characteristics and exceptional sliding properties, thanks to a very low surface roughness. It is particularly suitable for the critical points of bottling lines.

Material used for the following chain models:
Super, Flex RXMS, Flex FMS, Flex FMS2, New Flex Mag, Super G*, Flex RXMS G* and New Flex Mag G*.

Minimum temperatures:
- 40°C
Maximum temperatures:
+ 260°C (dry env.),
+ 120°C (wet env.)

* Minimum temperatures: -10ºC
Maximum temperatures: +80ºC

INOX
Ferritic, AISI 430 stainless steel, work hardened by cold-rolling, with good corrosion resistance. It has an excellent surface finishing with a low roughness, that is a very important quality for the sliding of conveyed products. It is the preferred choice for standard bottling industry applications.

Material used for the following chain models:
Special, Standard, Flex RXMC, Flex FMC and New Flex Mag.

Minimum temperatures:
- 40°C
Maximum temperatures:
+ 260°C (dry env.),
+ 120°C (wet env.)

HQ INOX (high quality)
Special, new, chrome-nickel (W.1.4589) stainless steel, work hardened. It has been developed in cooperation with a major stainless steel manufacturer for very special applications such as pressureless combiners/inliners. Cold rolled to extremely high quality standards, this material is the right answer to the most sophisticated needs. Its exceptional surface finishing and flatness together with a very high working load and wear resistance are unique features.

Material used for the following chain models:
Superspeed, Wear-Proof, Flex FMD and New Flex Mag D.

Minimum temperatures:
- 40°C
Maximum temperatures:
+ 260°C (dry env.),
+ 120°C (wet env.)

INOX 18/8
Austenitic, non-magnetic AISI 304 stainless steel (18% Chrome – 8% Nickel), work hardened for high resistance.
It provides excellent resistance to chemical agents and corrosion, and offers excellent mechanical and duration characteristics.
It is mainly used in the preservation and bottling industry. Approved by Food and Drug Administration (FDA), American government institute for the direct contact with foodstuff.

Material used for the following chain models:
Stella D, Flex RXM, Flex FM and Flex FM2.

Minimum temperatures:
- 40°C
Maximum temperatures:
+ 400°C (dry env.),
+ 120°C (wet env.)

INOX 316
Austenitic AISI 316L stainless steel (18% Chrome – 14% Nickel – 3% Molybdenum). It is ideal with chemical agents and strong acids.

Material used for the following chain models:
316 and Flex RXM 316.

Minimum temperatures:
- 40°C
Maximum temperatures:
+ 400°C (dry env.),
+ 120°C (wet env.)

CARBON STEEL
Heat-treated carbon steel with a surface and core hardness of 43 HRC.
It is especially suitable for high working loads and it is highly resistant to wear.
It is recommended for the glass, ceramic and general product conveying industry. In case of difficult applications, such as with abrasive dust, the carbon steel can be, upon request, case-hardened, thus reaching a surface hardness of 55 HRC and a core hardness of 40 HRC.

Material used for the following chain models:
Accate, Flex RXMA and Flex FMA2.

Minimum temperatures:
- 40°C
Maximum temperatures:
+ 180°C (dry env.)
+ 120°C (wet env.)

pins

STANDARD PIN
The following chain models :
Special, Standard, Super, Super G, Flex RXMC, Flex RXMS, Flex RXMS G, Flex FMS, Flex FMS2 and New Flex Mag, have pins made of AISI 431 stainless steel, magnetic and work hardened for high resistance.

HB PINS
The following chain models :
Wear Proof, Superspeed, Flex FMD and New Flex Mag D, have pins made of special martensitic stainless steel, magnetic and heat-treated for high resistance.

- Increased wear resistance
- Pins life up to 40% higher

XHB PINS
Special patented hardened pins series XHB are available upon request. They offer an additional wear resistance combined with an higher corrosion strength.

- Pins life up to 100% higher

AUSTENITIC 18/8 PINS
The following chain models:
Stella D, Flex RXM, Flex FM, Flex FM2 have pins made of austenitic stainless steel (18% Chrome - 8% Nickel), work hardened for high resistance.

- Excellent corrosion resistance.

AISI 316 PINS
The following chain models:
316 and Flex RXM 316, have pins made of austenitic AISI 316 stainless steel.

- Exceptional corrosion resistance.

CASE-HARDENED CARBON STEEL PINS
The following chain models:
Accate, Accate C, Flex RXMA, Flex RXMA C and Flex FMA2, have pins made of case-hardened carbon steel.

polished hinges for high speed application

Most of straight running and sideflexing Magris chains are available with polished hinges. This increases the performance of the chains on high-speed side transfers, improves the contact with the side guides and prevents pulsating of the chain raising the stability of the conveyed products.

NB.: Upon request, all our chains can be produced with other types of stainless steel.

Every care has been taken to ensure the accuracy of the information contained in this catalogue but no liability can be accepted for any errors or omissions.

straight running chains

SINGLE HINGE



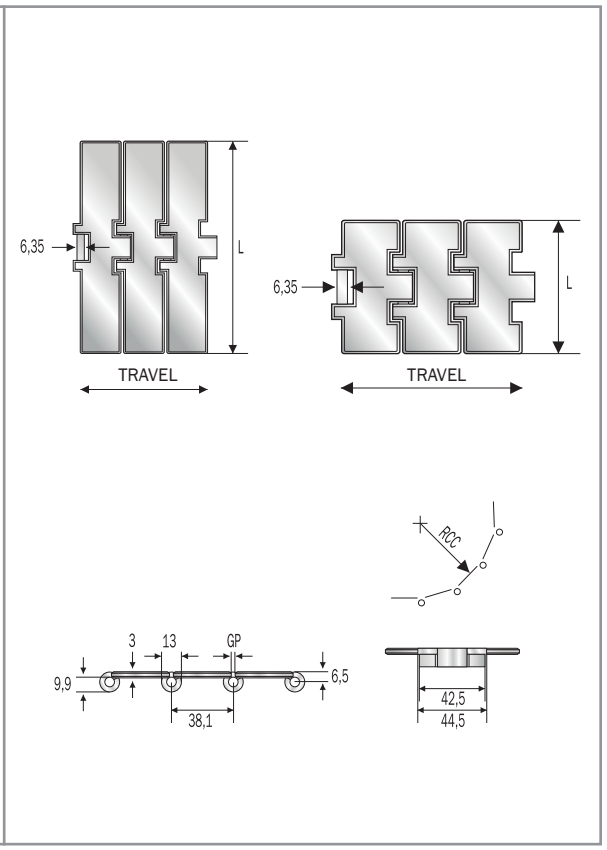

SUPER - HARD INOX

HB PINS
UPON REQUEST

Ra ★★★

- Special, chrome-nickel, stainless steel slats, work hardened for high resistance, with shiny surface having a roughness of **Ra ≤ 0,3 micron**.
- AISI 431 stainless steel pins, magnetic and work hardened for high resistance.

p.142 p.210 p.215 p.230 p.232

PRODUCT CODE	INTERNAL CODE	CHARACTERISTICS								
		Slat width (mm/ “)		Hardness (HRC)	GP (mm)	Flatness (max) mm	Polished hinges	Working Load N (max)	RCC (mm)	Weight kg/m
SSHR 812 K213*	S.7.00.013	54.1	-	30	2.8	0.18	no	6000	75	2.10
SSHR 812 K250	S.7.00.020	63.5	2 1/2	30	2.8	0.18	no	6000	75	2.20
SSHR 812 K325	S.7.00.040	82.5	3 1/4	30	2.8	0.18	no	6000	75	2.60
SSHR 812 K335	S.7.00.050	85.0	-	30	2.8	0.18	no	6000	75	2.68
SSHR 812 K500*	S.7.00.090	127.0	5	30	2.8	0.18	no	6000	75	3.50
	REDUCED PLATE GAP (1.6)									
SSH 812 K225	S.7.00.015	57.1	2 1/4	30	1.6	0.15	no	6000	150	2.18
SSH 812 K250	S.7.00.021	63.5	2 1/2	30	1.6	0.15	no	6000	150	2.25
SSH 812 K263	S.7.00.025	66.7	2 5/8	30	1.6	0.15	no	6000	150	2.33
SSH 812 K275	S.7.00.200	69.9	2 3/4	30	1.6	0.15	no	6000	150	2.35
SSH 812 K300	S.7.00.031	76.2	3	30	1.6	0.15	no	6000	150	2.50
SSH 812 K325	S.7.00.041	82.5	3 1/4	30	1.6	0.15	no	6000	150	2.65
SSH 812 K330	S.7.00.042	83.8	3 19/64	30	1.6	0.15	no	6000	150	2.70
SSH 812 K350	S.7.00.061	88.9	3 1/2	30	1.6	0.15	no	6000	150	2.75
SSH 812 K400	S.7.00.070	101.6	4	30	1.6	0.15	no	6000	150	3.00
SSH 812 K450	S.7.00.080	114.3	4 1/2	30	1.6	0.20	no	6000	150	3.30
SSH 812 K600	S.7.00.100	152.4	6	30	1.6	0.30	no	6000	150	4.20
SSH 812 K750	S.7.00.110	190.5	7 1/2	30	1.6	0.30	no	6000	150	5.10

* Size produced only upon request - delivery conditions and terms to be agreed. Standard shipping lengths: 80 pitches = 10 feet = 3,048 metres.

SUPERSPEED - HQ INOX

XHB PINS
UPON REQUEST

Ra ★★★

p.142 p.210 p.215 p.230 p.232

• Special, new stainless steel, chrome-nickel (W.1.4589) slats, work hardened for high resistance with very little roughness, **Ra ≤ 0.18 micron**.
• Special martensitic stainless steel **pins HB series**, magnetic and heat-treated for high resistance.
The chain is produced with a special profile: thanks to its perfect levelness and shiny surface, it is particularly suitable for pressureless combiners/ inliners and for high speed systems.

PRODUCT CODE	INTERNAL CODE	CHARACTERISTICS								
	REDUCED PLATE GAP (1.6)	Slat width (mm/ “)		Hardness (HRC)	GP (mm)	Flatness (max) mm	Polished hinges	Working Load N (max)	RCC (mm)	Weight kg/m
SSX 812 K325	DX.7.00.041	82.5	3 1/4	30	1.6	0.08	yes	6000	150	2.60
SSX 812 K330	DX.7.00.042	83.8	3 19/64	30	1.6	0.08	yes	6000	150	2.70

Standard shipping lengths: 80 pitches = 10 feet = 3,048 metres.

WEAR PROOF - HQ INOX

XHB PINS
UPON REQUEST

Ra ★★★

p.142 p.210 p.215 p.230 p.232

• Special, new stainless steel, chrome-nickel (W.1.4589) slats, work hardened for high resistance with very little surface roughness, **Ra ≤ 0.2 micron**.
• Special martensitic stainless steel **pins HB series**, magnetic and heat-treated for high resistance.

PRODUCT CODE	INTERNAL CODE	CHARACTERISTICS								
	REDUCED PLATE GAP (1.6)	Slat width (mm/ “)		Hardness (HRC)	GP (mm)	Flatness (max) mm	Polished hinges	Working Load N (max)	RCC (mm)	Weight kg/m
SSHQ 812 K250	D.7.00.021	63.5	2 1/2	30	1.6	0.08	yes	6000	150	2.25
SSHQ 812 K325	D.7.00.041	82.5	3 1/4	30	1.6	0.08	yes	6000	150	2.65
SSHQ 812 K330	D.7.00.042	83.8	3 19/64	30	1.6	0.08	yes	6000	150	2.75
SSHQ 812 K350	D.7.00.061	88,9	3 1/2	30	1.6	0.08	yes	6000	150	2.75
SSHQ 812 K450	D.7.00.080	114.3	4 1/2	30	1.6	0.20	yes	6000	150	3.30
SSHQ 812 K750	D.7.00.110	190.5	7 1/2	30	1.6	0.30	yes	6000	150	5.10

Standard shipping lengths: 80 pitches = 10 feet = 3,048 metres.

STANDARD - INOX

HB PINS
UPON REQUEST

p.142 p.210 p.215 p.230 p.232

• Ferritic, AISI 430 stainless steel slats, work hardened, with shiny surface having low roughness.
• AISI 431 stainless steel pins, magnetic and work hardened for high resistance.

PRODUCT CODE	INTERNAL CODE	CHARACTERISTICS								
		Slat width (mm/ “)		Hardness (HRC)	GP (mm)	Flatness (max) mm	Polished hinges	Working Load N (max)	RCC (mm)	Weight kg/m
SSR 812 K213*	7.00.013	54.1	-	20	2.8	0.18	no	5400	75	2.10
SSR 812 K250	7.00.020	63.5	2 1/2	20	2.8	0.18	no	5400	75	2.20
SSR 812 K325	7.00.040	82.5	3 1/4	20	2.8	0.18	no	5400	75	2.60
SSR 812 K335	7.00.050	85.0	-	20	2.8	0.18	no	5400	75	2.68
	REDUCED PLATE GAP (1.6)									
SS 812 K225	7.00.015	57.1	2 1/4	20	1.6	0.18	no	5400	150	2.18
SS 812 K250	7.00.021	63.5	2 1/2	20	1.6	0.18	no	5400	150	2.25
SS 812 K263	7.00.025	66.7	2 5/8	20	1.6	0.18	no	5400	150	2.33
SS 812 K275	7.00.200	69.9	2 3/4	20	1.6	0.18	no	5400	150	2.35
SS 812 K300	7.00.031	76.2	3	20	1.6	0.18	no	5400	150	2.50
SS 812 K325	7.00.041	82.5	3 1/4	20	1.6	0.18	no	5400	150	2.65
SS 812 K330	7.00.042	83.8	3 19/64	20	1.6	0.18	no	5400	150	2.70
SS 812 K350	7.00.061	88.9	3 1/2	20	1.6	0.18	no	5400	150	2.75
SS 812 K400	7.00.070	101.6	4	20	1.6	0.18	no	5400	150	3.00
SS 812 K450	7.00.080	114.3	4 1/2	20	1.6	0.20	no	5400	150	3.30
SS 812 K600	7.00.100	152.4	6	20	1.6	0.30	no	5400	150	4.20
SS 812 K750	7.00.110	190.5	7 1/2	20	1.6	0.30	no	5400	150	5.10

* Size produced only upon request - delivery conditions and terms to be agreed. Standard shipping lengths: 80 pitches = 10 feet = 3,048 metres.

316 - INOX 316

p.142 p.210 p.215 p.230 p.232

• Chrome-nickel, austenitic AISI 316L stainless steel slats (18% Chrome - 14% Nickel - 3% Molybdenum).
• Austenitic AISI 316 stainless steel pins.

PRODUCT CODE	INTERNAL CODE	CHARACTERISTICS								
	REDUCED PLATE GAP (1.6)	Slat width (mm/ “)		Hardness (HRC)	GP (mm)	Flatness (max) mm	Polished hinges	Working Load N (max)	RCC (mm)	Weight kg/m
SSAA 815 K325*	7.25.041	82.5	3 1/4	-	1.6	0.18	no	5100	150	2.65
SSAA 815 K450*	7.25.080	114.3	4 1/2	-	1.6	0.20	no	5100	150	3.30
SSAA 815 K600*	7.25.100	152.4	6	-	1.6	0.30	no	5100	150	4.20
SSAA 815 K750*	7.25.110	190.5	7 1/2	-	1.6	0.30	no	5100	150	5.10

* Size produced only upon request - delivery conditions and terms to be agreed. Standard shipping lengths: 80 pitches = 10 feet = 3,048 metres.

STELLA D - INOX 18/8

p.142 p.210 p.215 p.230 p.232

• Chrome-nickel, austenitic AISI 304 stainless steel slats (18% Chrome - 8% Nickel), work hardened for HR - shiny - with a roughness of **Ra < 0.5 micron**.
• Austenitic stainless steel pins (18% Chrome - 8% Nickel), work hardened for high resistance.

PRODUCT CODE	INTERNAL CODE	CHARACTERISTICS								
		Slat width (mm/ “)		Hardness (HRC)	GP (mm)	Flatness (max) mm	Polished hinges	Working Load N (max)	RCC (mm)	Weight kg/m
SSAR 815 K213*	7.10.013	54.1	-	26	2.8	0.18	no	5500	75	2.10
SSAR 815 K250	7.10.020	63.5	2 1/2	26	2.8	0.18	no	5500	75	2.20
SSAR 815 K325	7.10.040	82.5	3 1/4	26	2.8	0.18	no	5500	75	2.60
SSAR 815 K335*	7.10.050	85.0	-	26	2.8	0.18	no	5500	75	2.68
SSAR 815 K500	7.10.090	127.0	5	26	2.8	0.18	no	5500	75	3.50
	REDUCED PLATE GAP (1.6)									
SSA 815 K225	7.10.015	57.1	2 1/4	26	1.6	0.18	no	5500	150	2.18
SSA 815 K250	7.10.021	63.5	2 1/2	26	1.6	0.18	no	5500	150	2.25
SSA 815 K263	7.10.025	66.7	2 5/8	26	1.6	0.18	no	5500	150	2.33
SSA 815 K275	7.10.200	69.9	2 3/4	26	1.6	0.18	no	5500	150	2.35
SSA 815 K300	7.10.031	76.2	3	26	1.6	0.18	no	5500	150	2.50
SSA 815 K325	7.10.041	82.5	3 1/4	26	1.6	0.18	no	5500	150	2.65
SSA 815 K350	7.10.061	88.9	3 1/2	26	1.6	0.18	no	5500	150	2.75
SSA 815 K400	7.10.070	101.6	4	26	1.6	0.18	no	5500	150	3.00
SSA 815 K450	7.10.080	114.3	4 1/2	26	1.6	0.20	no	5500	150	3.30
SSA 815 K600	7.10.100	152.4	6	26	1.6	0.30	no	5500	150	4.20
SSA 815 K750	7.10.110	190.5	7 1/2	26	1.6	0.30	no	5500	150	5.10

* Size produced only upon request - delivery conditions and terms to be agreed. Standard shipping lengths: 80 pitches = 10 feet = 3,048 metres.



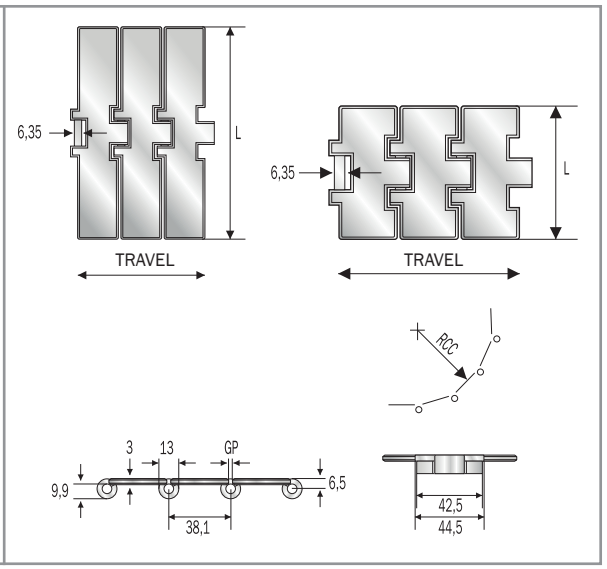

ACCATE C - CARBON STEEL

p.142 p.210 p.215 p.230 p.232

• Case-hardened carbon steel slats and pins.

PRODUCT CODE	INTERNAL CODE	CHARACTERISTICS								
		Slat width (mm/ “)		Hardness (HRC) Surf Core	GP (mm)	Flatness (max) mm	Polished hinges	Working Load N (max)	RCC (mm)	Weight kg/m
SCR 815 K325*	C.7.90.040	82.5	3 1/4	55/40	2.8	0.40	no	11500	75	2.10
	REDUCED PLATE GAP (1.6)									
SC 815 K325*	C.7.90.041	82.5	3 1/4	55/40	1.6	0.40	no	11500	150	2.65
SC 815 K350*	C.7.90.061	88.9	3 1/2	55/40	1.6	0.40	no	11500	150	2.75
SC 815 K450*	C.7.90.080	114.3	4 1/2	55/40	1.6	0.50	no	11500	150	3.30

* Size produced only upon request - delivery conditions and terms to be agreed. Standard shipping lengths: 80 pitches = 10 feet = 3,048 metres.

ACCATE - CARBON STEEL

p.142 p.210 p.215 p.230 p.232

• Heat-treated carbon steel slats.
• Case-hardened carbon steel pins.

PRODUCT CODE	INTERNAL CODE	CHARACTERISTICS								
		Slat width (mm/ “)		Hardness (HRC) Surf Core	GP (mm)	Flatness (max) mm	Polished hinges	Working Load N (max)	RCC (mm)	Weight kg/m
SR 815 K250	7.90.020	63.5	2 1/2	43	2.8	0.40	no	12000	75	2.20
SR 815 K325	7.90.040	82.5	3 1/4	43	2.8	0.40	no	12000	75	2.60
SR 815 K500	7.90.090	127.0	5	43	2.8	0.40	no	12000	75	3.50
	REDUCED PLATE GAP (1.6)									
S 815 K225	7.90.015	57.1	2 1/4	43	1.6	0.40	no	12000	150	2.18
S 815 K250	7.90.021	63.5	2 1/2	43	1.6	0.40	no	12000	150	2.25
S 815 K263*	7.90.025	66.7	2 5/8	43	1.6	0.40	no	12000	150	2.33
S 815 K300	7.90.031	76.2	3	43	1.6	0.40	no	12000	150	2.35
S 815 K325	7.90.041	82.5	3 1/4	43	1.6	0.40	no	12000	150	2.50
S 815 K350	7.90.061	88.9	3 1/2	43	1.6	0.40	no	12000	150	2.75
S 815 K400	7.90.070	101.6	4	43	1.6	0.50	no	12000	150	2.65
S 815 K450	7.90.080	114.3	4 1/2	43	1.6	0.60	no	12000	150	3.00
S 815 K473*	7.90.220	120.0	-	43	1.6	0.60	no	12000	150	3.30
S 815 K600	7.90.100	152.4	6	43	1.6	0.80	no	12000	150	4.20
S 815 K750	7.90.110	190.5	7 1/2	43	1.6	0.90	no	12000	150	5.10

* Size produced only upon request - delivery conditions and terms to be agreed. Standard shipping lengths: 80 pitches = 10 feet = 3,048 metres.

mignon straight running chains

SINGLE HINGE



EXTRA FLAT

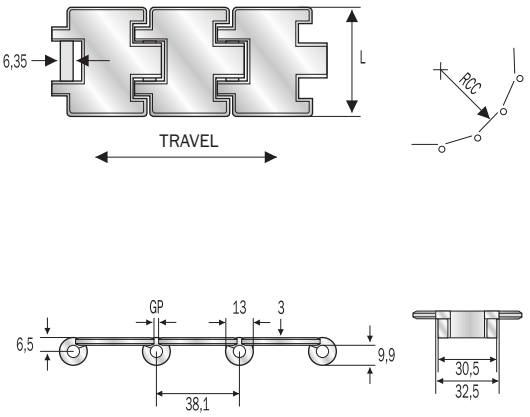

STANDARD - INOX

p.150 p.215 p.232

• Ferritic, AISI 430 stainless steel slats, work hardened, with shiny surface having low roughness.
• AISI 431 stainless steel pins, magnetic and work hardened for high resistance.

PRODUCT CODE	INTERNAL CODE	CHARACTERISTICS							
		Slat width (mm/ “)	Hardness (HRC)	GP (mm)	Flatness (max) mm	Polished hinges	Working Load N (max)	RCC (mm)	Weight kg/m
SSR 812 K197	7.00.010	50.0 -	20	2.5	0.18	no	2500	90	1.60

Standard shipping lengths: 80 pitches = 10 feet = 3,048 metres.

STELLA D - INOX 18/8

p.150 p.215 p.232

• Chrome-nickel, austenitic AISI 304 stainless steel slats (18% Chrome - 8% Nickel), work hardened for HR - shiny - with a roughness of **Ra < 0.5 micron**.
• Austenitic stainless steel pins (18% Chrome - 8% Nickel), work hardened for high resistance.

PRODUCT CODE	INTERNAL CODE	CHARACTERISTICS							
		Slat width (mm/ “)	Hardness (HRC)	GP (mm)	Flatness (max) mm	Polished hinges	Working Load N (max)	RCC (mm)	Weight kg/m
SSAR 815 K197	7.10.010	50.0 -	26	2.5	0.18	no	2800	90	1.60

Standard shipping lengths: 80 pitches = 10 feet = 3,048 metres.

mignon straight running chains

SINGLE HINGE



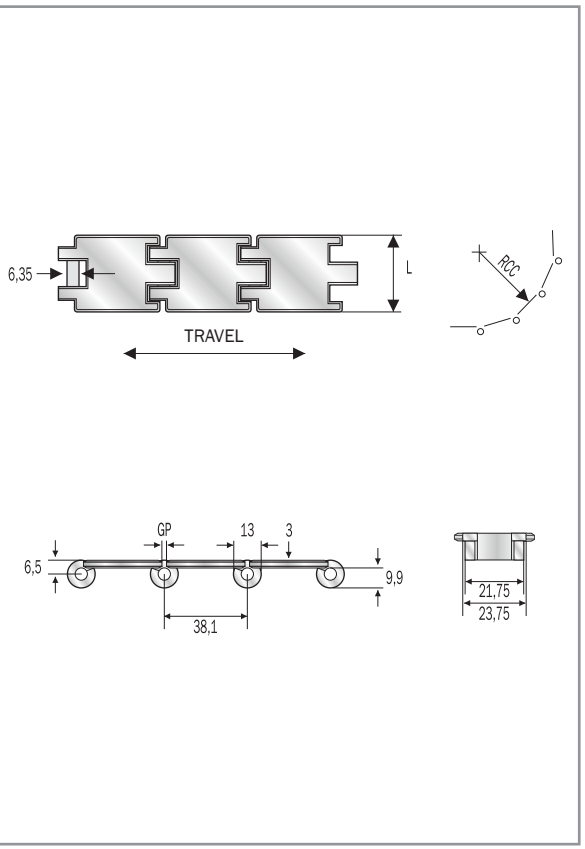

SUPER - HARD INOX

HB OR XHB PINS
UPON REQUEST

Ra ★★★

• Special, chrome-nickel, stainless steel slats, work hardened for high resistance, with shiny surface having a roughness of **Ra ≤ 0.3 micron**.
• AISI 431 stainless steel pins, magnetic and work hardened for high resistance.

p.150 p.215 p.232

PRODUCT CODE	INTERNAL CODE	CHARACTERISTICS								
		Slat width (mm/ “)		Hardness (HRC)	GP (mm)	Flatness (max) mm	Polished hinges	Working Load N (max)	RCC (mm)	Weight kg/m
SSHR 812 K125	8.25.280	31.8	1 1/4	30	2.8	0.18	no	2500	75	1.10
SSHR 812 K175	8.25.300	44.5	1 3/4	30	2.8	0.18	no	2500	75	1.30

Standard shipping lengths: 80 pitches = 10 feet = 3,048 metres.

ACCATE - CARBON STEEL

• Heat-treated carbon steel slats.
• Case-hardened carbon steel pins.

p.150 p.215 p.232

PRODUCT CODE	INTERNAL CODE	CHARACTERISTICS								
		Slat width (mm/ “)		Hardness (HRC)	GP (mm)	Flatness (max) mm	Polished hinges	Working Load N (max)	RCC (mm)	Weight kg/m
SR 815 K125	8.95.280	31.8	1 1/4	43	2.8	0.40	no	3300	75	1.10
SR 815 K175	8.95.300	44.5	1 3/4	43	2.8	0.40	no	3300	75	1.30

Standard shipping lengths: 80 pitches = 10 feet = 3,048 metres.

straight running chains

SINGLE HINGE 1 INCH



EXTRA FLAT

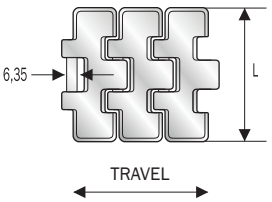

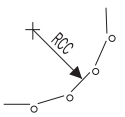

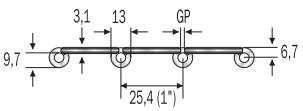

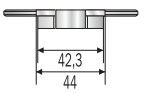

SUPER - HARD INOX

Ra ★★★

p.148 p.232

• Special, chrome-nickel, stainless steel slats, work hardened for high resistance, with shiny surface having a roughness of **Ra ≤ 0,3 micron**.
• AISI 431 stainless steel pins, magnetic and work hardened for high resistance.

PRODUCT CODE	INTERNAL CODE	CHARACTERISTICS							
	REDUCED PLATE GAP (1.6)	Slat width (mm/ “)	Hardness (HRC)	GP (mm)	Flatness (max) mm	Polished hinges	Working Load N (max)	RCC (mm)	Weight kg/m
SSH 512 K197*	S.9.00.010	50.0	30	1.6	0.30	no	5200	100	2.20
SSH 512 K217	S.9.00.017	55.0	30	1.6	0.30	no	5200	100	2.29
SSH 512 K236	S.9.00.036	60.0	30	1.6	0.30	no	5200	100	2.41
SSH 512 K250	S.9.00.020	63.5	30	1.6	0.30	no	5200	100	2.49
SSH 512 K283	S.9.00.283	72.0	30	1.6	0.30	no	5200	100	2.65
SSH 512 K325	S.9.00.040	82.5	30	1.6	0.30	no	5200	100	2.86
SSH 512 K350	S.9.00.060	88.9	30	1.6	0.30	no	5200	100	3.01
SSH 512 K400	S.9.00.070	101.6	30	1.6	0.30	no	5200	100	3.26

Standard shipping lengths: 120 pitches = 10 feet = 3,048 metres.
* Size produced only upon request - delivery conditions and terms to be agreed.

straight running chains

SINGLE REINFORCED HINGE



EXTRA FLAT

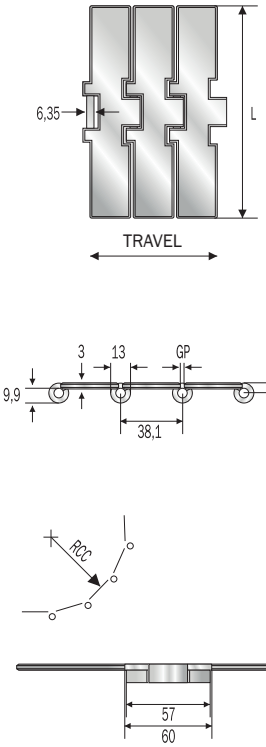

SUPER - HARD INOX

HB PINS
UPON REQUEST

Ra ★★★

p.157 p.230 p.232

- Special, chrome-nickel, stainless steel slats, work hardened for high resistance, with shiny surface having a roughness of **Ra ≤ 0.3 micron**.
- AISI 431 stainless steel pins, magnetic and work hardened for high resistance.

PRODUCT CODE	INTERNAL CODE	CHARACTERISTICS								
	REDUCED PLATE GAP (1.6)	Slat width (mm/ “)		Hardness (HRC)	GP (mm)	Flatness (max) mm	Polished hinges	Working Load N (max)	RCC (mm)	Weight kg/m
SSH 8127 K750	S.7.00.175	190.5	7 1/2	30	1.6	0.30	no	10400	150	5.10

Standard shipping lengths: 80 pitches = 10 feet = 3,048 metres.

WEAR PROOF - HQ INOX

XHB PINS
UPON REQUEST

Ra ★★★

p.157 p.230 p.232

- Special, new stainless steel, chrome-nickel (W. 1.4589) slats, work hardened for high resistance with very little surface roughness, **Ra ≤ 0.2 micron**.
- Special martensitic stainless steel **pins HB series**, magnetic and heat-treated for high resistance.

PRODUCT CODE	INTERNAL CODE	CHARACTERISTICS								
	REDUCED PLATE GAP (1.6)	Slat width (mm/ “)		Hardness (HRC)	GP (mm)	Flatness (max) mm	Polished hinges	Working Load N (max)	RCC (mm)	Weight kg/m
SSHQ 8127 K750	D.7.00.175	190.5	7 1/2	30	1.6	0.30	no	10400	150	5.10

Standard shipping lengths: 80 pitches = 10 feet = 3,048 metres.

straight running chains

SINGLE REINFORCED HINGE WITH TABS



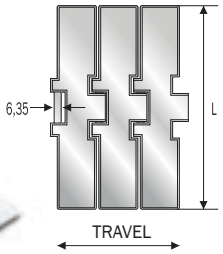

EXTRA FLAT

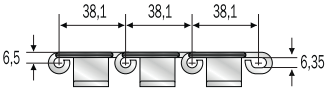

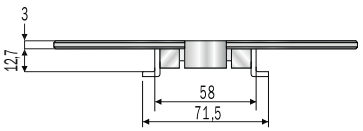

SUPER - HARD INOX

HB PINS
UPON REQUEST

Ra ★★★

p.157 p.232

- Special, chrome-nickel, stainless steel slats, work hardened for high resistance, with shiny surface having a roughness of **Ra ≤ 0.3 micron**.
- AISI 431 stainless steel pins, magnetic and work hardened for high resistance.
- Chrome-nickel, austenitic stainless steel guide shoes (18% Chrome - 8% Nickel), work hardened for high resistance.

PRODUCT CODE	INTERNAL CODE	CHARACTERISTICS								
	REDUCED PLATE GAP (1.6)	Slat width (mm/ “)		Hardness (HRC)	GP (mm)	Flatness (max) mm	Polished hinges	Working Load N (max)	RCC (mm)	Weight kg/m
SSH 8127 T K750	S.7.00.175TAB*	190.5	7 1/2	30	1.6	0.30	no	10400	150	5.90

Standard shipping lengths: 80 pitches = 10 feet = 3,048 metres.
* Size produced only upon request - delivery conditions and terms to be agreed.

straight running chains

DOUBLE HINGE

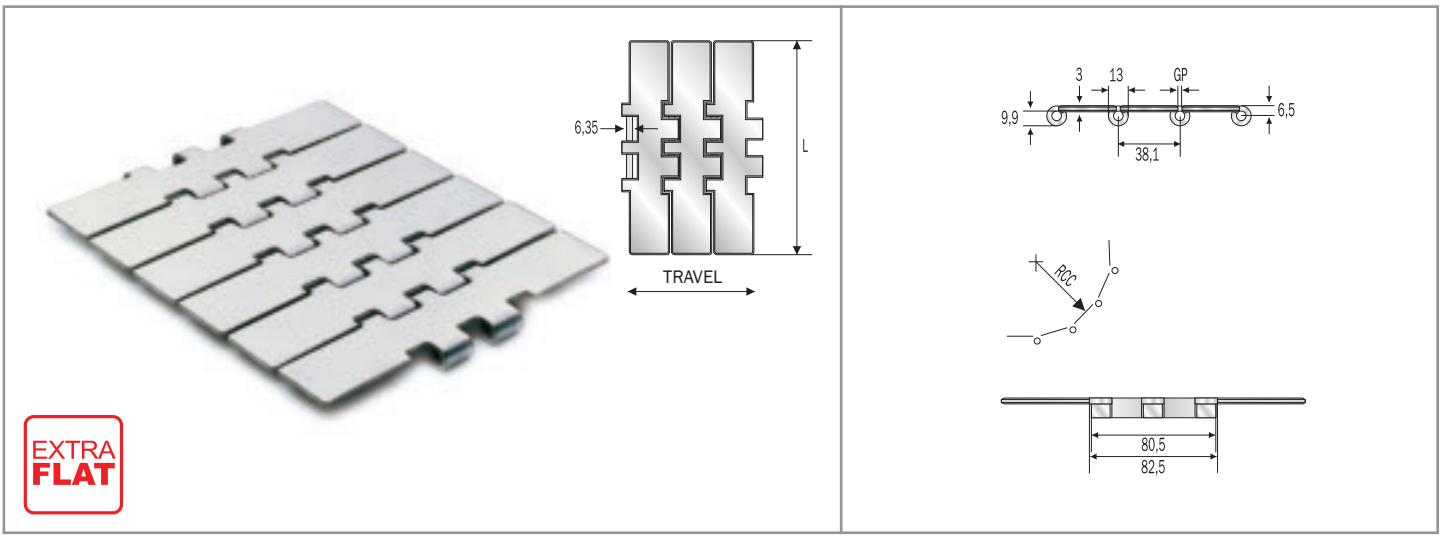

STANDARD - INOX

• Ferritic, AISI 430 stainless steel slats, work hardened, with shiny surface having low roughness.
• AISI 431 stainless steel pins, magnetic and work hardened for high resistance.

p.153 p.211 p.230 p.232

PRODUCT CODE	INTERNAL CODE	CHARACTERISTICS								
	REDUCED PLATE GAP (1.6)	Slat width (mm/ “)		Hardness (HRC)	GP (mm)	Flatness (max) mm	Polished hinges	Working Load N (max)	RCC (mm)	Weight kg/m
SS 802 K750	7.04.110	190.5	7 1/2	20	1.6	0.30	no	10300	150	5.80

Standard shipping lengths: 80 pitches = 10 feet = 3,048 metres.

SUPER - HARD INOX

HB PINS UPON REQUEST

Ra ★★★

• Special, chrome-nickel, stainless steel slats, work hardened for high resistance, with shiny surface having a roughness of **Ra ≤ 0.3 micron**.
• AISI 431 stainless steel pins, magnetic and work hardened for high resistance.

p.153 p.211 p.230 p.232

PRODUCT CODE	INTERNAL CODE	CHARACTERISTICS								
	REDUCED PLATE GAP (1.6)	Slat width (mm/ “)		Hardness (HRC)	GP (mm)	Flatness (max) mm	Polished hinges	Working Load N (max)	RCC (mm)	Weight kg/m
SSH 802 K450	S.7.04.080	114.3	4 1/2	30	1.6	0.30	no	15000	150	4.00
SSH 802 K500*	S.7.04.090	127.0	5	30	1.6	0.30	no	15000	150	4.45
SSH 802 K600	S.7.04.100	152.4	6	30	1.6	0.30	no	15000	150	4.95
SSH 802 K750	S.7.04.110	190.5	7 1/2	30	1.6	0.30	no	15000	150	5.80

Standard shipping lengths: 80 pitches = 10 feet = 3,048 metres.
* Size produced only upon request - delivery conditions and terms to be agreed.

STELLA D - INOX 18/8

• Chrome-nickel, austenitic AISI 304 stainless steel slats (18% Chrome - 8% Nickel), work hardened for HR - shiny - with a roughness of **Ra < 0.5 micron**.
• Austenitic stainless steel pins (18% Chrome - 8% Nickel), work hardened for high resistance.

p.153 p.211 p.230 p.232

PRODUCT CODE	INTERNAL CODE	CHARACTERISTICS								
	REDUCED PLATE GAP (1.6)	Slat width (mm/ “)		Hardness (HRC)	GP (mm)	Flatness (max) mm	Polished hinges	Working Load N (max)	RCC (mm)	Weight kg/m
SSA 805 K450	7.14.080	114.3	4 1/2	26	1.6	0.30	no	9600	150	4.00
SSA 805 K500*	7.14.090	127.0	5	26	1.6	0.30	no	9600	150	4.45
SSA 805 K600	7.14.100	152.4	6	26	1.6	0.30	no	9600	150	4.95
SSA 805 K750	7.14.110	190.5	7 1/2	26	1.6	0.30	no	9600	150	5.80

Standard shipping lengths: 80 pitches = 10 feet = 3,048 metres.
* Size produced only upon request - delivery conditions and terms to be agreed.

straight running chains

DOUBLE HINGE



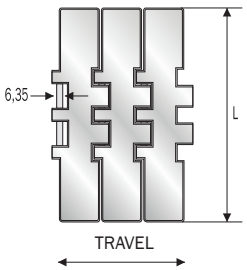

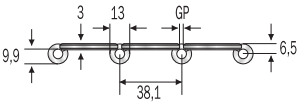

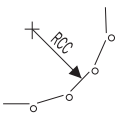

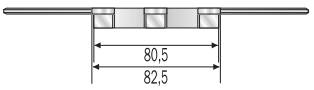

ACCATE - CARBON STEEL

p.153 p.211 p.230 p.232

- Heat-treated carbon steel slats.
- Case-hardened carbon steel pins.

PRODUCT CODE	INTERNAL CODE	CHARACTERISTICS								
		Slat width (mm/ “)		Hardness (HRC)	GP (mm)	Flatness (max) mm	Polished hinges	Working Load N (max)	RCC (mm)	Weight kg/m
SR 802 K750	7.94.111 REDUCED PLATE GAP (1.6)	190.5	7 1/2	43	2.8	0.90	no	28000	75	5.70
S 802 K450	7.94.080	114.3	4 1/2	43	1.6	0.90	no	28000	150	4.00
S 802 K500*	7.94.090	127.0	5	43	1.6	0.90	no	28000	150	4.45
S 802 K600	7.94.100	152.4	6	43	1.6	0.90	no	28000	150	4.95
S 802 K750	7.94.110	190.5	7 1/2	43	1.6	0.90	no	28000	150	5.80

Standard shipping lengths: 80 pitches = 10 feet = 3,048 metres.
* Size produced only upon request - delivery conditions and terms to be agreed.

straight running chains

DOUBLE REINFORCED HINGE



EXTRA FLAT

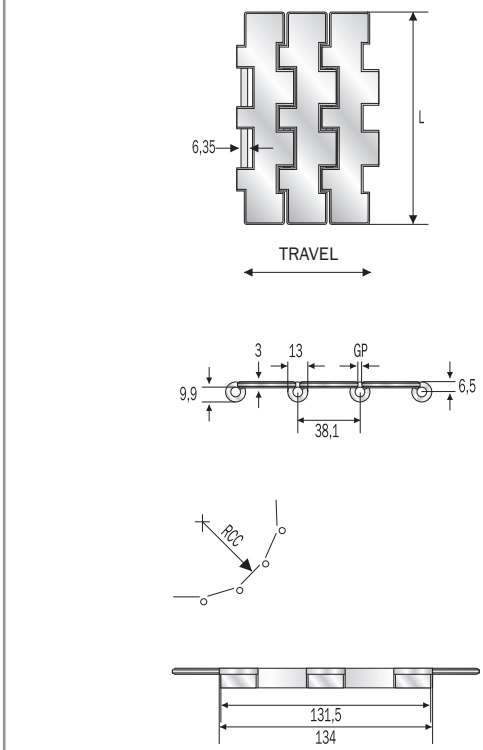

STELLA D - INOX 18/8

p.153 p.211 p.232

• Chrome-nickel, austenitic AISI 304 stainless steel slats (18% Chrome - 8% Nickel), work hardened for HR - shiny - with a roughness of **Ra < 0.5 micron.**
• Austenitic stainless steel pins (18% Chrome - 8% Nickel), work hardened for high resistance.

PRODUCT CODE	INTERNAL CODE	CHARACTERISTICS								
		Slat width (mm/ “)		Hardness (HRC)	GP (mm)	Flatness (max) mm	Polished hinges	Working Load N (max)	RCC (mm)	Weight kg/m
SSAR 804 K670	7.24.050	170.0	-	26	2.5	0.90	no	24000	90	6.30
SSAR 804 K750	7.24.060	190.5	7 1/2	26	2.5	0.90	no	24000	90	6.80

Standard shipping lengths: 80 pitches = 10 feet = 3,048 metres.

sideflexing hinged slat chains

SINGLE HINGE

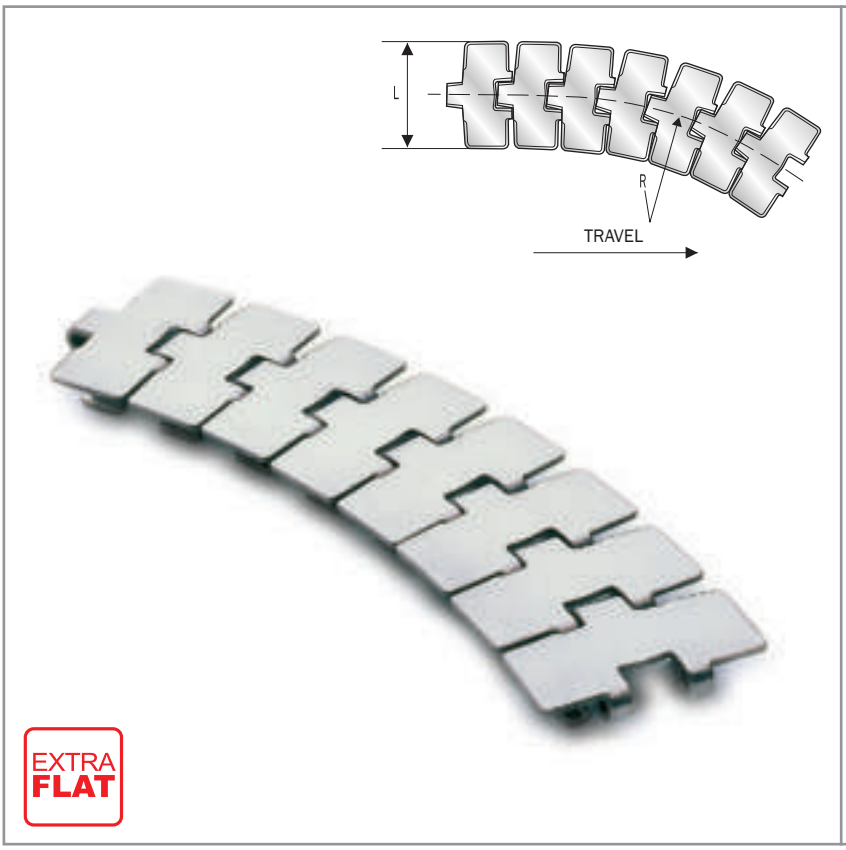

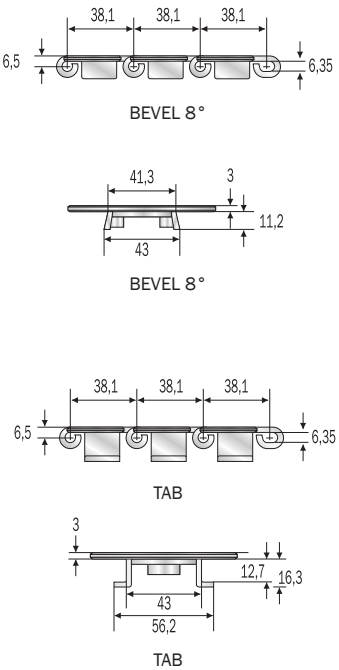

FLEX RXMC - INOX

p.161 p.211 p.218 p.220 p.228 p.229

- Ferritic, AISI 430 stainless steel slats, work hardened, with shiny surface having low roughness.
- Chrome-nickel, austenitic stainless steel guide shoes (18% Chrome - 8% Nickel), work hardened for high resistance.
- AISI 431 stainless steel pins, magnetic and work hardened for high resistance.

PRODUCT CODE	INTERNAL CODE	CHARACTERISTICS							
BEVEL 8°		Slat width (mm/ “)		Min. sideflexing radius (mm)	Hardness (HRC)	Flatness (max) mm	Polished hinges	Working Load N (max)	Weight kg/m
SS 881 K325	8.23.040	82.5	3 1/4	457	20	0.18	no	5400	2.80
SS 881 K450	8.23.080	114.3	4 1/2	500	20	0.25	no	5400	3.40
SS 881 K750	8.23.110	190.5	7 1/2	500	20	0.40	no	5400	4.80
TAB									
SS 881 T K325	8.23.041	82.5	3 1/4	457	20	0.18	no	5400	3.10
SS 881 T K450	8.23.081	114.3	4 1/2	500	20	0.25	no	5400	3.60
SS 881 T K750	8.23.111	190.5	7 1/2	500	20	0.40	no	5400	5.05

Standard shipping lengths: 80 pitches = 10 feet = 3,048 metres.

FLEX RXMS - HARD INOX

HB PINS
UPON REQUEST

Ra ★★★

p.161 p.211 p.218 p.220 p.228 p.229

- Special, chrome-nickel, stainless steel slats, work hardened for high resistance, with shiny surface having a roughness of **Ra ≤ 0.3 micron**.
- Chrome-nickel, austenitic stainless steel guide shoes (18% Chrome - 8% Nickel), work hardened for high resistance.
- AISI 431 stainless steel pins, magnetic and work hardened for high resistance.

PRODUCT CODE	INTERNAL CODE	CHARACTERISTICS							
BEVEL 8°		Slat width (mm/ “)		Min. sideflexing radius (mm)	Hardness (HRC)	Flatness (max) mm	Polished hinges	Working Load N (max)	Weight kg/m
SSH 881 K325	S.8.23.040	82.5	3 1/4	457	30	0.18	no	6000	2.80
SSH 881 K450	S.8.23.080	114.3	4 1/2	500	30	0.25	no	6000	3.40
SSH 881 K600*	S.8.23.100	152.4	6	500	30	0.40	no	6000	4.10
SSH 881 K750	S.8.23.110	190.5	7 1/2	500	30	0.40	no	6000	4.80
TAB									
SSH 881 T K325	S.8.23.041	82.5	3 1/4	457	30	0.18	no	6000	2.95
SSH 881 T K450	S.8.23.081	114.3	4 1/2	500	30	0.25	no	6000	3.60
SSH 881 T K600*	S.8.23.101	152.4	6	500	30	0.40	no	6000	4.25
SSH 881 T K750	S.8.23.111	190.5	7 1/2	500	30	0.40	no	6000	5.05

Standard shipping lengths: 80 pitches = 10 feet = 3,048 metres.
* Size produced only upon request - delivery conditions and terms to be agreed.

FLEX RXM - INOX 18/8

p.161 p.211 p.218 p.220 p.228 p.229

- Chrome-nickel, austenitic AISI 304 stainless steel slats (18% Chrome - 8% Nickel), work hardened for HR - shiny with a roughness of **Ra < 0.5 micron**.
- Chrome-nickel, austenitic stainless steel guide shoes (18% Chrome - 8% Nickel), work hardened for high resistance.
- Austenitic stainless steel pins (18% Chrome - 8% Nickel), work hardened for high resistance.

PRODUCT CODE	INTERNAL CODE	CHARACTERISTICS							
BEVEL 8°		Slat width (mm/ “)		Min. sideflexing radius (mm)	Hardness (HRC)	Flatness (max) mm	Polished hinges	Working Load N (max)	Weight kg/m
SSA 881 K325	8.13.040	82.5	3 1/4	457	26	0.18	no	5500	2.90
SSA 881 K450	8.13.080	114.3	4 1/2	500	26	0.25	no	5500	3.60
SSA 881 K600*	8.13.100	152.4	6	500	26	0.40	no	5500	4.30
SSA 881 K750	8.13.110	190.5	7 1/2	500	26	0.40	no	5500	5.30
TAB									
SSA 881 T K325	8.13.041	82.5	3 1/4	457	26	0.18	no	5500	3.10
SSA 881 T K450	8.13.081	114.3	4 1/2	500	26	0.25	no	5500	3.80
SSA 881 T K600*	8.13.101	152.4	6	500	26	0.40	no	5500	4.45
SSA 881 T K750	8.13.111	190.5	7 1/2	500	26	0.40	no	5500	5.50

Standard shipping lengths: 80 pitches = 10 feet = 3,048 metres.
* Size produced only upon request - delivery conditions and terms to be agreed.

FLEX RXM - INOX 316

p.161 p.211 p.218 p.220 p.228 p.229

- Chrome-nickel, austenitic AISI 316L stainless steel slats (18% Chrome - 14% Nickel - 3% Molybdenum).
- Chrome-nickel, austenitic AISI 316L stainless steel guide shoes.
- Austenitic AISI 316 stainless steel pins.

PRODUCT CODE	INTERNAL CODE	CHARACTERISTICS							
		Slat width (mm/ “)		Min. sideflexing radius (mm)	Hardness (HRC)	Flatness (max) mm	Polished hinges	Working Load N (max)	Weight kg/m
SSAA 881 T K325*	8.33.041	82.5	3 1/4	457	-	0.18	no	4500	3.10
SSAA 881 T K450*	8.33.081	114.3	4 1/2	500	-	0.25	no	4500	3.80
SSAA 881 T K600*	8.33.101	152.4	6	500	-	0.40	no	4500	4.45
SSAA 881 T K750*	8.33.111	190.5	7 1/2	500	-	0.40	no	4500	5.50

Standard shipping lengths: 80 pitches = 10 feet = 3,048 metres.
* Size produced only upon request - delivery conditions and terms to be agreed.

sideflexing hinged slat chains

SINGLE HINGE

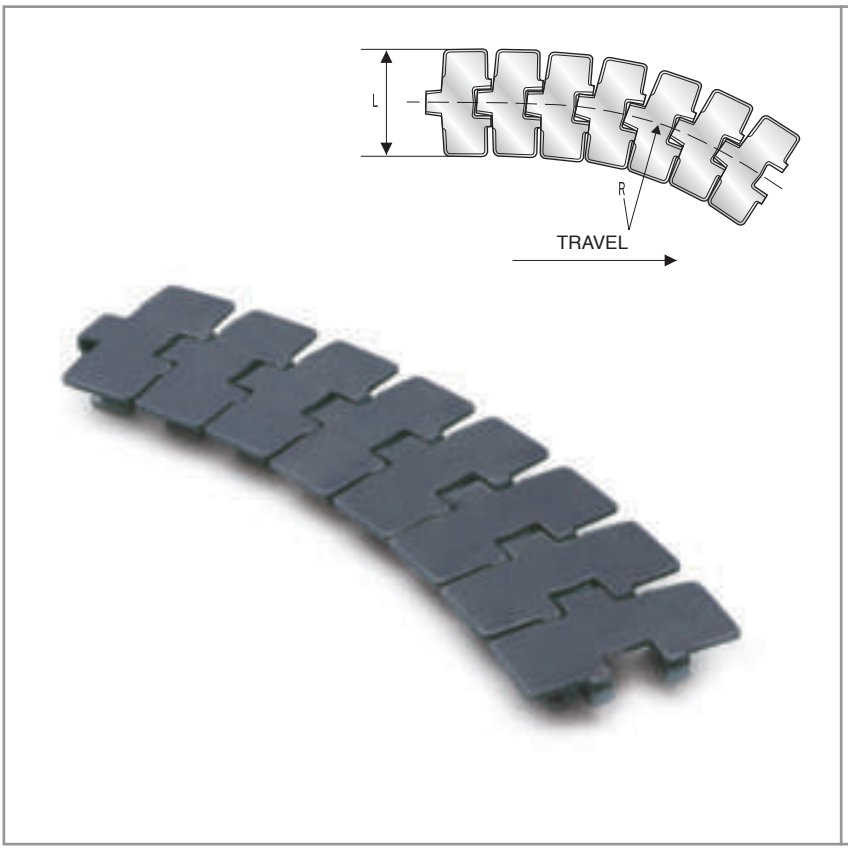

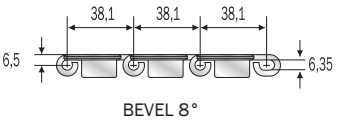

BEVEL 8°

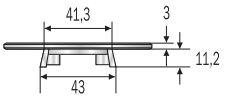

BEVEL 8°

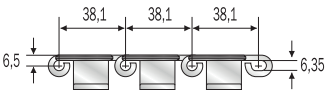

TAB

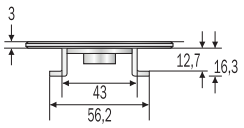

TAB

FLEX RXMA - CARBON STEEL

p.161 p.211 p.218 p.220 p.228 p.229

• Heat-treated carbon steel slats, with a surface and core hardness of 43 HRC.
• Case-hardened carbon steel pins.
NOTE: Upon request, the “Flex RXMA Tab” chain with a slat width of 82.5 mm (3 1/4”) can be produced in case-hardened carbon steel having a surface hardness of 55 HRC and a core hardness of 40 HRC (code: C.8.93.041).

PRODUCT CODE	INTERNAL CODE	CHARACTERISTICS							
BEVEL 8°		Slat width (mm/ “)		Min. sideflexing radius (mm)	Hardness (HRC)	Flatness (max) mm	Polished hinges	Working Load N (max)	Weight kg/m
S 881 K325	8.93.040	82.5	3 1/4	457	43	0.40	no	12000	2.90
S 881 K450	8.93.080	114.3	4 1/2	500	43	0.60	no	12000	3.60
S 881 K600*	8.93.100	152.4	6	500	43	0.60	no	12000	4.30
S 881 K750	8.93.110	190.5	7 1/2	500	43	0.90	no	12000	5.30
TAB									
S 881 T K250	8.93.021	63.5	2 1/2	457	43	0.40	no	12000	2.65
S 881 T K325	8.93.041	82.5	3 1/4	457	43	0.40	no	12000	3.10
S 881 T K450	8.93.081	114.3	4 1/2	500	43	0.60	no	12000	3.80
S 881 T K600*	8.93.101	152.4	6	500	43	0.60	no	12000	4.45
S 881 T K750	8.93.111	190.5	7 1/2	500	43	0.90	no	12000	5.50

Standard shipping lengths: 80 pitches = 10 feet = 3,048 metres.
* Size produced only upon request - delivery conditions and terms to be agreed.

sideflexing hinged slat chains

SINGLE HINGE - REDUCED PLATE GAP - 8811 SERIES

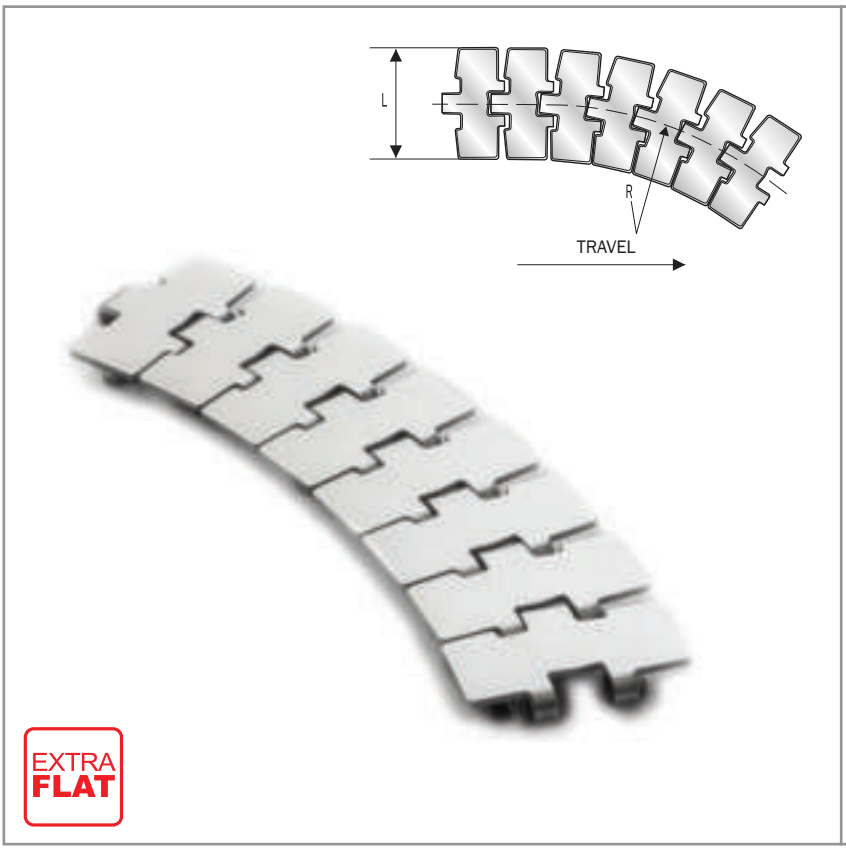

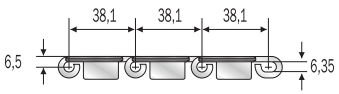

BEVEL 8°

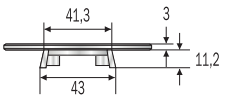

BEVEL 8°

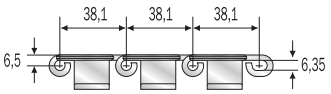

TAB

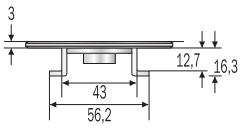

TAB

FLEX FMC - INOX

HB PINS
UPON REQUEST

p.161 p.211 p.218 p.220 p.228 p.229

- Ferritic, AISI 430 stainless steel slats, work hardened, with shiny surface having low roughness.
- Chrome-nickel, austenitic stainless steel guide shoes (18% Chrome - 8% Nickel), work hardened for high resistance.
- AISI 431 stainless steel pins, magnetic and work hardened for high resistance.

PRODUCT CODE	INTERNAL CODE	CHARACTERISTICS							
BEVEL 8°		Slat width (mm/ “)		Min. sideflexing radius (mm)	Hardness (HRC)	Flatness (max) mm	Polished hinges	Working Load N (max)	Weight kg/m
SS 8811 K325	8.26.040	82.5	3 1/4	500	20	0.18	no	5400	3.10
SS 8811 K330	8.26.044	83.8	3 19/64	500	20	0.25	no	5400	3.15
SS 8811 K450	8.26.080	114.3	4 1/2	610	20	0.40	no	5400	3.80
SS 8811 K750	8.26.110	190.5	7 1/2	610	20	0.40	no	5400	5.50
TAB									
SS 8811 T K325	8.26.041	82.5	3 1/4	500	20	0.18	no	5400	3.10
SS 8811 T K330	8.26.042	83.8	3 19/64	500	20	0.25	no	5400	3.15
SS 8811 T K450	8.26.081	114.3	4 1/2	610	20	0.40	no	5400	3.80
SS 8811 T K750	8.26.111	190.5	7 1/2	610	20	0.40	no	5400	5.50

Standard shipping lengths: 80 pitches = 10 feet = 3,048 metres.

FLEX FMS - HARD INOX

HB OR XHB PINS UPON REQUEST

p.161 p.211 p.218 p.220 p.228 p.229

- Special, chrome-nickel, stainless steel slats, work hardened for HR, with shiny surface having a roughness of **Ra ≤ 0.3 micron**.
- Chrome-nickel, austenitic stainless steel guide shoes (18% Chrome - 8% Nickel), work hardened for high resistance.
- AISI 431 stainless steel pins, magnetic and work hardened for high resistance.

PRODUCT CODE	INTERNAL CODE	CHARACTERISTICS							
BEVEL 8°		Slat width (mm/ “)		Min. sideflexing radius (mm)	Hardness (HRC)	Flatness (max) mm	Polished hinges	Working Load N (max)	Weight kg/m
SSH 8811 K325	S.8.26.040	82.5	3 1/4	500	30	0.18	no	6000	2.90
SSH 8811 K330	S.8.26.044	83.8	3 19/64	500	30	0.25	no	6000	2.80
SSH 8811 K350	S.8.26.060	88.9	3 1/2	500	30	0.25	no	6000	3.10
SSH 8811 K450	S.8.26.080	114.3	4 1/2	610	30	0.40	no	6000	3.60
SSH 8811 K750	S.8.26.110	190.5	7 1/2	610	30	0.40	no	6000	5.30
TAB									
SSH 8811 T K325	S.8.26.041	82.5	3 1/4	500	30	0.18	no	6000	3.10
SSH 8811 T K330	S.8.26.042	83.8	3 19/64	500	30	0.25	no	6000	3.15
SSH 8811 T K350	S.8.26.061	88.9	3 1/2	500	30	0.25	no	6000	3.30
SSH 8811 T K450	S.8.26.081	114.3	4 1/2	610	30	0.40	no	6000	3.80
SSH 8811 T K750	S.8.26.111	190.5	7 1/2	610	30	0.40	no	6000	5.50

Standard shipping lengths: 80 pitches = 10 feet = 3,048 metres.

FLEX FMD - HQ INOX

XHB PINS UPON REQUEST

p.161 p.211 p.218 p.228

- Special, new stainless steel, chrome-nickel (W.1.4589) slats, work hardened for HR, with low surface roughness, **Ra ≤ 0.2 micron**.
- Chrome-nickel, austenitic stainless steel guide shoes (18% Chrome - 8% Nickel), work hardened for high resistance.
- Special martensitic stainless steel **pins HB series**, magnetic and heat-treated for high resistance.

PRODUCT CODE	INTERNAL CODE	CHARACTERISTICS							
		Slat width (mm/ “)		Min. sideflexing radius (mm)	Hardness (HRC)	Flatness (max) mm	Polished hinges	Working Load N (max)	Weight kg/m
SSX 8811 T K325	D.8.26.041	82.5	3 1/4	500	30	0.18	no	6000	3.10
SSX 8811 T K330	D.8.26.042	83.8	3 19/64	500	30	0.18	no	6000	3.15
SSX 8811 T K350	D.8.26.061	88.9	3 1/2	500	30	0.18	no	6000	3.30

Standard shipping lengths: 80 pitches = 10 feet = 3,048 metres.

FLEX FM - INOX 18/8

p.161 p.211 p.218 p.220 p.228 p.229

- Chrome-nickel, austenitic AISI 304 stainless steel slats (18% Chrome - 8% Nickel), work hardened for HR - shiny - with a roughness of **Ra < 0.5 micron**.
- Chrome-nickel, austenitic stainless steel guide shoes (18% Chrome - 8% Nickel), work hardened for high resistance.
- Austenitic stainless steel pins (18% Chrome - 8% Nickel), work hardened for high resistance.

PRODUCT CODE	INTERNAL CODE	CHARACTERISTICS							
BEVEL 8°		Slat width (mm/ “)		Min. sideflexing radius (mm)	Hardness (HRC)	Flatness (max) mm	Polished hinges	Working Load N (max)	Weight kg/m
SSA 8811 K325	8.16.040	82.5	3 1/4	500	25	0.18	no	5500	2.90
SSA 8811 K350	8.16.060	88.9	3 1/2	500	25	0.25	no	5500	3.10
TAB									
SSA 8811 T K325	8.16.041	82.5	3 1/4	500	25	0.18	no	5500	3.10
SSA 8811 T K350	8.16.061	88.9	3 1/2	500	25	0.25	no	5500	3.30

Standard shipping lengths: 80 pitches = 10 feet = 3,048 metres.

sideflexing hinged slat chains

REDUCED SIDEFLEXING RADIUS - R190

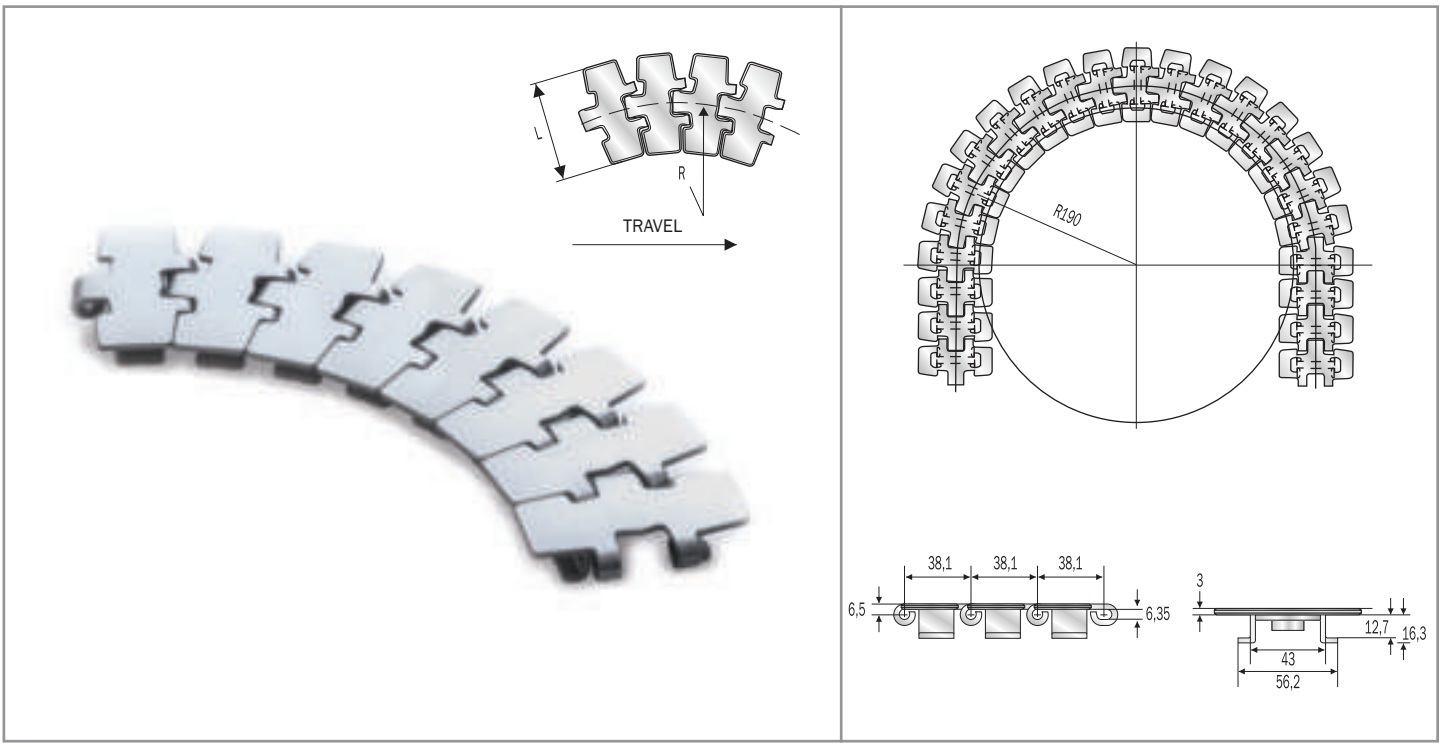

FLEX FMS2 - R = 190mm HARD INOX

HB PINS
UPON REQUEST

Ra ★★★

p.161 p.211 p.218 p.228

- Special, chrome-nickel, stainless steel slats, work hardened for high resistance, with shiny surface having a roughness of **Ra ≤ 0.3 micron**.
- Chrome-nickel, austenitic stainless steel guide shoes (18% Chrome - 8% Nickel), work hardened for high resistance.
- AISI 431 stainless steel pins, magnetic and work hardened for high resistance.

PRODUCT CODE	INTERNAL CODE	CHARACTERISTICS							
		Slat width (mm/ “)		Min. sideflexing radius (mm)	Hardness (HRC)	Flatness (max) mm	Polished hinges	Working Load N (max)	Weight kg/m
SSH 8811 R T K325	S.8.29.041	82.5	3 1/4	190	30	0.18	no	4900	3.00

FLEX FM2 - R = 190mm INOX 18/8

p.161 p.211 p.218 p.228

- Chrome-nickel, austenitic AISI 304 stainless steel slats (18% Chrome - 8% Nickel), work hardened for high resistance - shiny - with a roughness of **Ra < 0.5 micron**.
- Chrome-nickel, austenitic stainless steel guide shoes (18% Chrome - 8% Nickel), work hardened for high resistance.
- Austenitic stainless steel pins (18% Chrome - 8% Nickel), work hardened for high resistance.

PRODUCT CODE	INTERNAL CODE	CHARACTERISTICS							
		Slat width (mm/ “)		Min. sideflexing radius (mm)	Hardness (HRC)	Flatness (max) mm	Polished hinges	Working Load N (max)	Weight kg/m
SSA 8811 R T K325	8.19.041	82.5	3 1/4	190	25	0.18	no	4400	3.00

FLEX FMA2 - R = 190mm CARBON STEEL

p.161 p.211 p.218 p.228

- Heat-treated carbon steel slats, with a surface and core hardness of 43 HRC.
- Case-hardened carbon steel pins.

NOTE: Upon request, the “Flex FMA2” chain can be produced in case-hardened carbon steel having a surface hardness of 55 HRC and a core hardness of 40 HRC (code: C.8.99.041 FMA2-C)

PRODUCT CODE	INTERNAL CODE	CHARACTERISTICS							
		Slat width (mm/ “)		Min. sideflexing radius (mm)	Hardness (HRC)	Flatness (max) mm	Polished hinges	Working Load N (max)	Weight kg/m
S 8811 R T K325	8.99.041	82.5	3 1/4	190	43	0.18	no	9700	3.00

Standard shipping lengths: 80 pitches = 10 feet = 3,048 metres.
Not to be used with a lateral curving disc.

sideflexing hinged slat chains

REDUCED PLATE GAP FOR MAGNETIC SYSTEMS

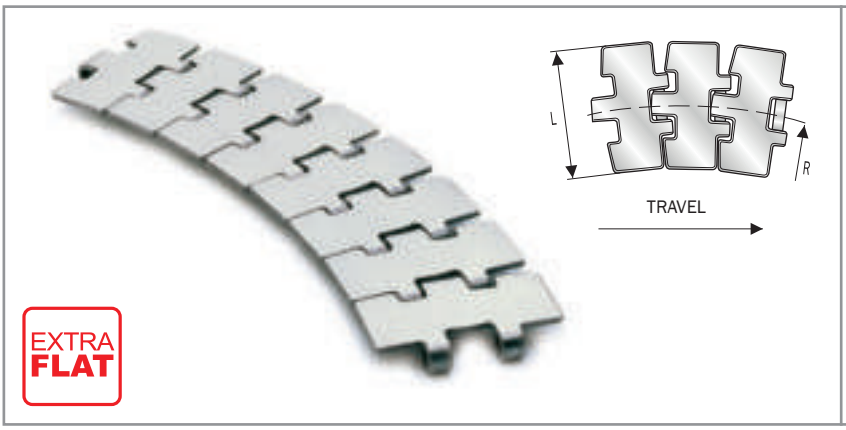

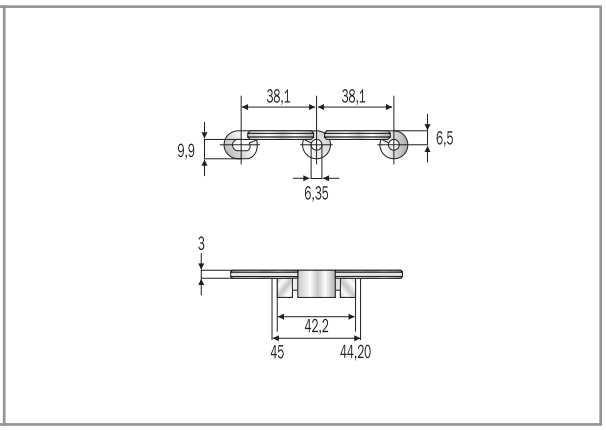

NEW FLEX MAG - INOX

p.161 p.211 p.106 p.230 p.232

• Ferritic, AISI 430 stainless steel slats, work hardened, with shiny surface having low roughness.
• Special, stainless steel pins, 400 series-magnetic-work hardened for high resistance.

PRODUCT CODE	INTERNAL CODE	CHARACTERISTICS							
		Slat width (mm/ “)		Min. sideflexing radius (mm)	Hardness (HRC)	Flatness (max) mm	Polished hinges	Working Load N (max)	Weight kg/m
SS 8811 M K325	7.08.040	82.5	3 1/4	500	20	0.18	yes	5400	2.50
SS 8811 M K330	7.08.042	83.8	3 19/64	500	20	0.25	yes	5400	2.65
SS 8811 M K350*	7.08.060	88.9	3 1/2	500	20	0.25	yes	5400	2.80
SS 8811 M K450	7.08.080	114.3	4 1/2	500	20	0.40	yes	5400	3.20
SS 8811 M K750	7.08.110	190.5	7 1/2	500	20	0.40	yes	5400	4.90

NEW FLEX MAG - HARD INOX

HB PINS
UPON REQUEST

Ra ★★★

p.161 p.211 p.106 p.230 p.232

• Special, chrome-nickel, stainless steel slats, work hardened for high resistance, with shiny surface having a roughness of **Ra ≤ 0.3 micron**.
• Special, stainless steel pins, 400 series - magnetic - work hardened for high resistance.

PRODUCT CODE	INTERNAL CODE	CHARACTERISTICS							
		Slat width (mm/ “)		Min. sideflexing radius (mm)	Hardness (HRC)	Flatness (max) mm	Polished hinges	Working Load N (max)	Weight kg/m
SSH 8811 M K325	S.7.08.040	82.5	3 1/4	500	30	0.18	yes	6000	2.50
SSH 8811 M K330	S.7.08.042	83.8	3 19/64	500	30	0.25	yes	6000	2.65
SSH 8811 M K350	S.7.08.060	88.9	3 1/2	500	30	0.25	yes	6000	2.80
SSH 8811 M K450	S.7.08.080	114.3	4 1/2	500	30	0.40	yes	6000	3.20
SSH 8811 M K750	S.7.08.110	190.5	7 1/2	500	30	0.40	yes	6000	4.90

NEW FLEX MAG D - HQ INOX

XHB PINS
UPON REQUEST

Ra ★★★

p.161 p.211 p.106 p.230 p.232

• Special, new stainless steel, chrome-nickel (W.1.4589) slats - magnetic - work hardened for HR, with shiny surface having a roughness of **Ra ≤ 0.2 micron**.
• Special, martensitic stainless steel **pins HB series**, magnetic and heat-treated for high resistance.

PRODUCT CODE	INTERNAL CODE	CHARACTERISTICS							
		Slat width (mm/ “)		Min. sideflexing radius (mm)	Hardness (HRC)	Flatness (max) mm	Polished hinges	Working Load N (max)	Weight kg/m
SSX 8811 M K325	D.7.08.040	82.5	3 1/4	500	30	0.08	yes	6000	2.50
SSX 8811 M K330	D.7.08.042	83.8	3 19/64	500	30	0.08	yes	6000	2.65
SSX 8811 M K350	D.7.08.060	88.9	3 1/2	500	30	0.40	yes	6000	2.80
SSX 8811 M K750	D.7.08.110	190.5	7 1/2	500	30	0.40	yes	6000	4.90

Standard shipping lengths: 80 pitches = 10 feet = 3,048 metres. * Size produced only upon request - delivery conditions and terms to be agreed.

sideflexing chains

FOR MAGNETIC SYSTEMS - REINFORCED HINGE



EXTRA FLAT

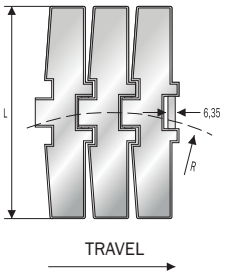

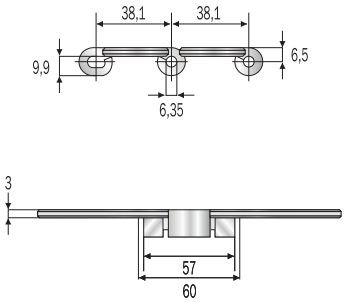

NEW FLEX MAG - HARD INOX

HB PINS
UPON REQUEST

Ra ★★★

p.157 p.107 p.230 p.232

- Special, chrome-nickel, stainless steel slats, work hardened for high resistance, with shiny surface having a roughness of **Ra ≤ 0.3 micron**.
- Special, stainless steel pins, 400 series - magnetic - work hardened for high resistance.

PRODUCT CODE	INTERNAL CODE	CHARACTERISTICS						
		Slat width (mm/ “)	Min. sideflexing radius (mm)	Hardness (HRC)	Flatness (max) mm	Polished hinges	Working Load N (max)	Weight kg/m
SSH 8817 M K750	S.7.08.175	190.5 7 1/2	750	30	0.60	yes	7000	5.03

NEW FLEX MAG D - HQ INOX

XHB PINS
UPON REQUEST

Ra ★★★

p.157 p.107 p.230 p.232

- Special, new stainless steel, chrome-nickel (W.1.4589) slats - magnetic - work hardened for HR, with shiny surface having a roughness of **Ra ≤ 0.2 micron**.
- Special, martensitic stainless steel **pins HB series**, magnetic and heat-treated for high resistance.

PRODUCT CODE	INTERNAL CODE	CHARACTERISTICS						
		Slat width (mm/ “)	Min. sideflexing radius (mm)	Hardness (HRC)	Flatness (max) mm	Polished hinges	Working Load N (max)	Weight kg/m
SSX 8817 M K750	D.7.08.175	190.5 7 1/2	750	30	0.60	yes	7000	5.03



EXTRA FLAT

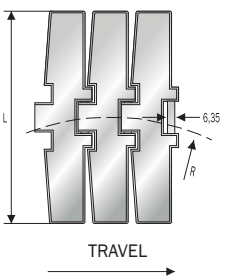

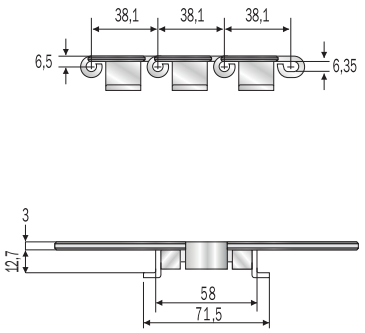

NEW FLEX MAG TAB - HARD INOX

HB PINS
UPON REQUEST

p.157 upon request p.232

- Special, chrome-nickel, stainless steel slats, work hardened for high resistance, with shiny surface having a roughness of **Ra ≤ 0.3 micron**.
- Chrome-nickel, austenitic stainless steel guide shoes (18% Chrome - 8% Nickel), work hardened for high resistance.
- Special, stainless steel pins, 400 series - magnetic - work hardened for high resistance.

PRODUCT CODE	INTERNAL CODE	CHARACTERISTICS						
		Slat width (mm/ “)	Min. sideflexing radius (mm)	Hardness (HRC)	Flatness (max) mm	Polished hinges	Working Load N (max)	Weight kg/m
SSH 8817 T K750	S.7.08.175TAB	190.5 7 1/2	750	30	0.60	no	7000	5.58

Standard shipping lengths: 80 pitches = 10 feet = 3,048 metres

straight running chains

WITH RUBBER INSERTS FOR INCLINED CONVEYORS



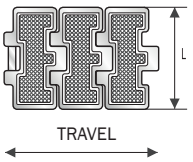



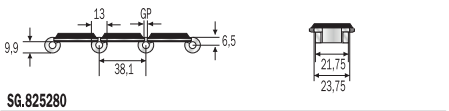

SG.825280

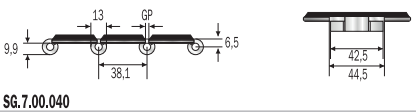

SG.7.00.040
SG.7.00.080

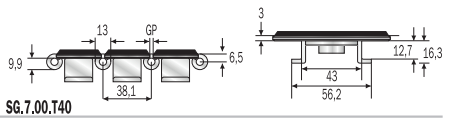

SG.7.00.T40

SUPER G / DHG - HARD INOX

XHB PINS
UPON REQUEST

- Special, chrome-nickel, stainless steel slats, work hardened for high resistance, with a rubber insert.
- Chrome-nickel, austenitic stainless steel guide shoes (18% Chrome - 8% Nickel), (Super-G TAB).
- Special, martensitic stainless steel **pins HB series** magnetic and heat-treated for high resistance.

p.142 p.210 p.215
p.230 p.232

PRODUCT CODE	INTERNAL CODE	CHARACTERISTICS						
		Slat width (mm/ “)		Hardness (HRC)	GP (mm)	Working Load N (max)	RCC (mm)	Weight kg/m
SSHR 812 G K125	SG.8.25.280	31.8	1 1/4	30	2.8	2500	75	1.20
SSHR 812 G K325	SG.7.00.040	82.5	3 1/4	30	2.8	6000	75	2.80

Standard shipping lengths: 80 pitches = 10 feet = 3,048 metres.

p.142 p.210 p.211
p.230 p.232

PRODUCT CODE	INTERNAL CODE	CHARACTERISTICS						
		Slat width (mm/ “)		Hardness (HRC)	GP (mm)	Working Load N (max)	RCC (mm)	Weight kg/m
SSHR 812 T G K325	SG.7.00.T40 REDUCED PLATE GAP (1.6)	82.5	3 1/4	30	2.8	6000	75	3.40
SSH 812 G K450	SG.7.00.080	114.3	4 1/2	30	1.6	6000	150	3.50

Standard shipping lengths: 80 pitches = 10 feet = 3,048 metres.

straight running chains

WITH RUBBER INSERTS FOR INCLINED CONVEYORS



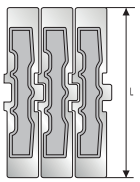

SG.7.00.110

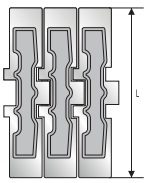

SG.7.00.175

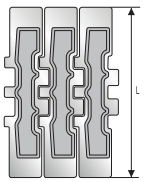

SG 7 04 110

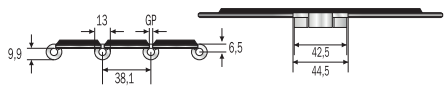

SG.7.00.080
SG.7.00.100 / SG.7.00.110

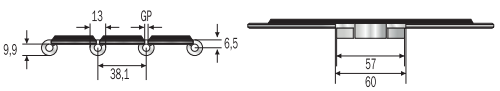

SG.7.00.175

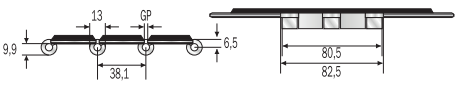

SG.7.04.110

SUPER G / DHG - HARD INOX

XHB PINS
UPON REQUEST

- Special, chrome-nickel, stainless steel slats, work hardened for high resistance, with a rubber insert.
- Chrome-nickel, austenitic stainless steel guide shoes (18% Chrome - 8% Nickel), (Super-G TAB).
- Special, martensitic stainless steel **pins HB series** magnetic and heat-treated for high resistance.

p.142 p.210 p.215
p.230 p.232

PRODUCT CODE	INTERNAL CODE	CHARACTERISTICS						
	REDUCED PLATE GAP (1.6)	Slat width (mm/ “)		Hardness (HRC)	GP (mm)	Working Load N (max)	RCC (mm)	Weight kg/m
SSH 812 G K600	SG.7.00.100	152.4	6	30	1.6	6000	150	4.40
SSH 812 G K750	SG.7.00.110	190.5	7 1/2	30	1.6	6000	150	5.30

Standard shipping lengths: 80 pitches = 10 feet = 3,048 metres.

p.153 p.157 p.211
p.230 p.232

PRODUCT CODE	INTERNAL CODE	CHARACTERISTICS						
		Slat width (mm/ “)		Hardness (HRC)	GP (mm)	Working Load N (max)	RCC (mm)	Weight kg/m
SSH 8127 G K750	SG.7.00.175	190.5	7 1/2	30	1.6	7000	150	5.35
SSH 802 G K750	SG.7.04.110	190.5	7 1/2	30	1.6	15000	150	6.20

Standard shipping lengths: 80 pitches = 10 feet = 3,048 metres.

sideflexing hinged slat chains

WITH RUBBER INSERTS FOR INCLINED CONVEYORS



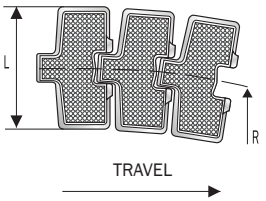

BEVEL 8°

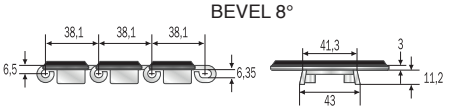

SG.8.23.040
SG.8.23.080

TAB

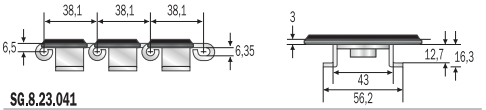

SG.8.23.041
SG.8.23.081

FLEX RXMS G - HARD INOX

XHB PINS
UPON REQUEST

- Special, chrome-nickel, stainless steel slats, work hardened for high resistance, with a rubber insert.
- Chrome-nickel, austenitic stainless steel guide shoes (18% Chrome - 8% Nickel).
- Special, martensitic stainless steel **pins HB series** magnetic and heat-treated for high resistance.

p.161 p.211 p.218 p.220 p.228 p.229

PRODUCT CODE	INTERNAL CODE	CHARACTERISTICS					
BEVEL 8°		Slat width (mm/ “)		Min. sideflexing radius (mm)	Hardness (HRC)	Working Load N (max)	Weight kg/m
SSH 881 G K325	SG.8.23.040	82.5	3 1/4	457	30	6000	3.10
SSH 881 G K450	SG.8.23.080	114.3	4 1/2	500	30	6000	3.80
TAB							
SSH 881 T G K325	SG.8.23.041	82.5	3 1/4	457	30	6000	3.30
SSH 881 T G K450	SG.8.23.081	114.3	4 1/2	500	30	6000	4.00

Standard shipping lengths: 80 pitches = 10 feet = 3,048 metres.

sideflexing hinged slat chains

WITH RUBBER INSERTS FOR INCLINED CONVEYORS



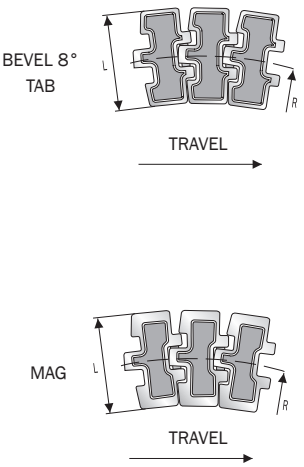

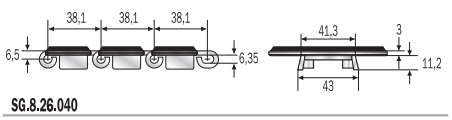

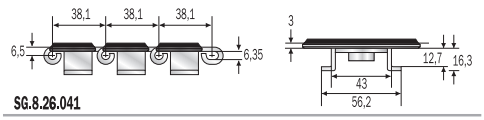

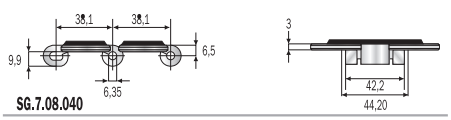

FLEX FMS G / NEW FLEX G MAG - HARD INOX

XHB PINS
UPON REQUEST

- Special, chrome-nickel, stainless steel slats, work hardened for high resistance, with a rubber insert.
- Chrome-nickel, austenitic stainless steel guide shoes (18% Chrome - 8% Nickel), (Flex RXMS - G).
- Special, martensitic stainless steel **pins HB series** magnetic and heat-treated for high resistance.

p.161 p.211 | p.106 p.218 p.220 | p.228 p.229

PRODUCT CODE	INTERNAL CODE	CHARACTERISTICS					
BEVEL 8°		Slat width (mm/ “)		Min. sideflexing radius (mm)	Hardness (HRC)	Working Load N (max)	Weight kg/m
SSH 8811 G K325*	SG.8.26.040	82.5	3 1/4	500	30	6000	3.10
TAB							
SSH 8811 T G K325*	SG.8.26.041	82.5	3 1/4	500	30	6000	3.30
MAG							
SSH 8811 M G K325	SG.7.08.040	82.5	3 1/4	500	30	6000	2.70

* Size produced only upon request - delivery conditions and terms to be agreed.
Standard shipping lengths: 80 pitches = 10 feet = 3,048 metres.

sideflexing hinged slat chains

WITH RUBBER INSERTS FOR INCLINED CONVEYORS



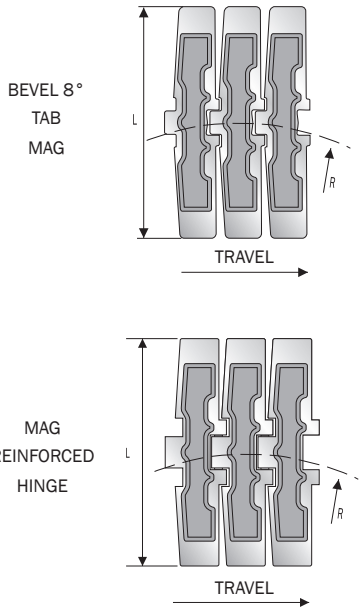

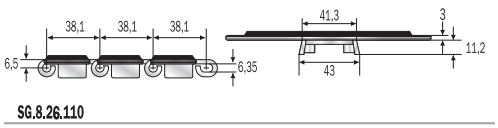

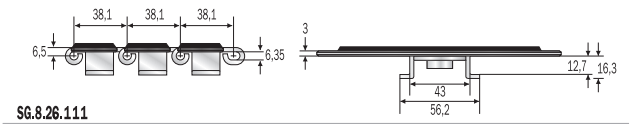

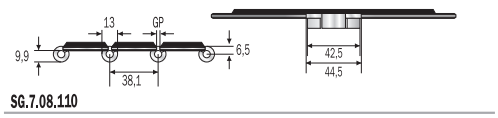

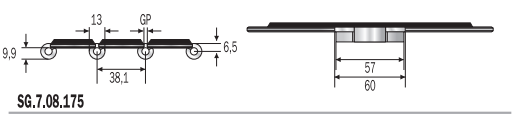

FLEX FMS G / NEW FLEX G MAG - HARD INOX

XHB PINS
UPON REQUEST

- Special, chrome-nickel, stainless steel slats, work hardened for high resistance, with a rubber insert.
- Chrome-nickel, austenitic stainless steel guide shoes (18% Chrome - 8% Nickel).
- Special, martensitic stainless steel **pins HB series** magnetic and heat-treated for high resistance.

p.157 p.161 p.211
p.106 p.218 p.220
p.228 p.230 p.232

PRODUCT CODE	INTERNAL CODE	CHARACTERISTICS					
BEVEL 8°		Slat width (mm/ “)		Min. sideflexing radius (mm)	Hardness (HRC)	Working Load N (max)	Weight kg/m
SSH 8811 G K750	SG.8.26.110	190.5	7 1/2	500	30	6000	5.50
TAB							
SSH 8811 T G K750	SG.8.26.111	190.5	7 1/2	500	30	6000	5.70
MAG							
SSH 8811 M G K750	SG.7.08.110	190.5	7 1/2	500	30	6000	5.10
MAG REINFORCED HINGE							
SSH 8817 M G K750	SG.7.08.175	190.5	7 1/2	750	30	7000	5.14

Standard shipping lengths: 80 pitches = 10 feet = 3,048 metres.

sideflexing hinged slat chains

WITH RUBBER INSERTS FOR INCLINED CONVEYORS



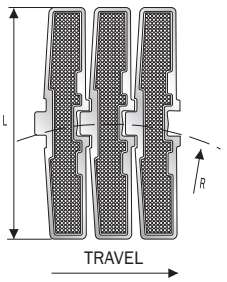

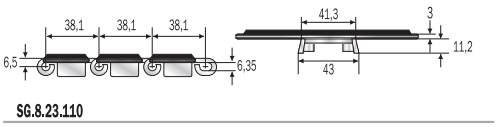

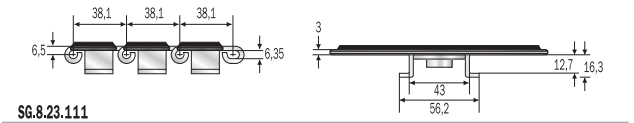

FLEX RXMS G - HARD INOX

XHB PINS
UPON REQUEST

- Special, chrome-nickel, stainless steel slats, work hardened for high resistance, with a rubber insert.
- Chrome-nickel, austenitic stainless steel guide shoes (18% Chrome - 8% Nickel)
- Special, martensitic stainless steel **pins HB series** magnetic and heat-treated for high resistance.

p.161 p.211 p.218 p.220 p.228 p.229

PRODUCT CODE	INTERNAL CODE	CHARACTERISTICS					
BEVEL 8°		Slat width (mm/ “)		Min. sideflexing radius (mm)	Hardness (HRC)	Working Load N (max)	Weight kg/m
SSH 881 G K750*	SG.8.23.110	190.5	7 1/2	500	30	6000	5.50
TAB							
SSH 881 T G K750*	SG.8.23.111	190.5	7 1/2	500	30	6000	5.70

* Size produced only upon request - delivery conditions and terms to be agreed.
Standard shipping lengths: 80 pitches = 10 feet = 3,048 metres.

straight running plate top chains

1864 SERIES



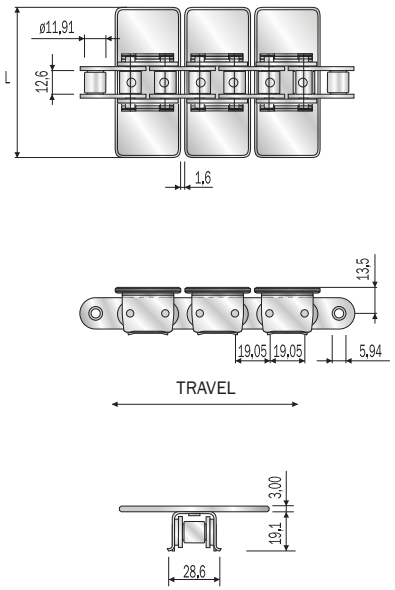

1864

p.214 p.232

- This high speed, high capacity series offers better efficiency and reliability in applications where high temperatures or abrasive materials are involved.
- Steel and stainless steel top plates.
- Base roller chain, 19,05 mm - 3/4" pitch ANSI 60.

PRODUCT CODE	INTERNAL CODE	CHARACTERISTICS		
		Slat width (mm)	Ultimate strenght (N)	Weight kg/m
1864 K325	1864.CC.041	82.5	37000	3.33
1864 K450	1864.CC.081	114.3	37000	4.00
1864 K600	1864.CC.101	152.4	37000	5.33
1864 K750	1864.CC.111	190.5	37000	5.68
1864 A K325	1864.CS.041	82.5	37000	3.33
1864 A K450	1864.CS.081	114.3	37000	4.00
1864 A K600	1864.CS.101	152.4	37000	5.33
1864 A K750	1864.CS.111	190.5	37000	5.68
1864 SS K325	1864.SS.041	82.5	26000	3.33
1864 SS K450	1864.SS.081	114.3	26000	4.00
1864 SS K600	1864.SS.101	152.4	26000	5.33
1864 SS K750	1864.SS.111	190.5	26000	5.68

NOTE ON MATERIALS
1864 - steel base roller chain, steel top plate.
1864 A - steel base roller chain, stainless steel top plate.
1864 SS - stainless steel base roller chain, stainless steel top plate.

sideflexing plate top chains

1874 SERIES



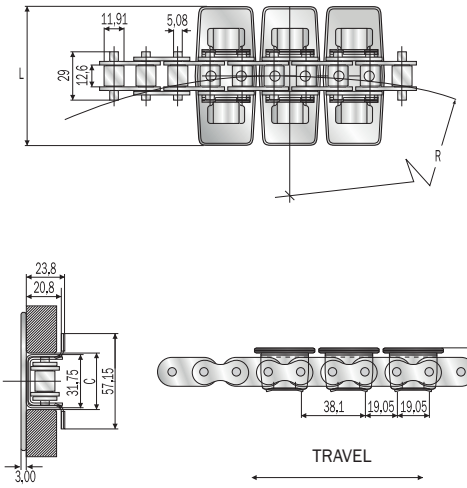

1874

- This high speed, high capacity series offers better efficiency and reliability in applications where high temperatures or abrasive materials are involved.
- Steel and stainless steel top plates.
- Base roller chain, 19,05 mm - 3/4" pitch ANSI 63 SB.

p.214 p.225 p.228 p.232

PRODUCT CODE	INTERNAL CODE	CHARACTERISTICS					
		Slat width (mm)	Ultimate strenght (N)	Straight C (mm)	Curve C (mm)	R (mm)	Weight kg/m
1874 K325	1874.CC.041	82.5	27000	34.1	34.6	356	4.20
1874 K450	1874.CC.081	114.3	27000	34.1	34.6	356	4.80
1874 K600	1874.CC.101	152.4	27000	34.1	34.6	457	5.70
1874 K750	1874.CC.111	190.5	27000	34.1	34.6	610	6.40
1874 A K325	1874.CS.041	82.5	27000	34.1	34.6	356	4.20
1874 A K450	1874.CS.081	114.3	27000	34.1	34.6	356	4.80
1874 A K600	1874.CS.101	152.4	27000	34.1	34.6	457	5.70
1874 A K750	1874.CS.111	190.5	27000	34.1	34.6	610	6.40
1874 SS K325	1874.SS.041	82.5	21000	34.1	34.6	356	4.20
1874 SS K450	1874.SS.081	114.3	21000	34.1	34.6	356	4.80
1874 SS K600	1874.SS.101	152.4	21000	34.1	34.6	457	5.70
1874 SS K750	1874.SS.111	190.5	21000	34.1	34.6	610	6.40

NOTE ON MATERIALS
1874 - steel base roller chain, steel top plate.
1874 A - steel base roller chain, stainless steel top plate.
1874 SS - stainless steel base roller chain, stainless steel top plate.

steel corrosion resistance table

LEGEND

○ = Little resistance - not recommended
• = Average resistance
• • = Good resistance - it can be used

	CHEMICAL AGENT	FERRITIC STAINLESS STEEL INOX	SPECIAL Cr-Ni STAINLESS STEEL HARD INOX	SPECIAL NEW Cr-Ni STAINLESS STEEL HQ INOX	AUSTENITIC STAINLESS STEEL INOX 18/8	AUSTENITIC STAINLESS STEEL INOX 316	CARBON STEEL
A	Acetic acid	○	○	○	•	• •	○
	Acetone	• •	• •	• •	• •	• •	○
	Aluminium chloride	○	○	○	•	•	○
	Ammonia	• •	• •	• •	• •	• •	○
	Ammonium chloride	○	○	○	•	•	○
	Amyl alcohol	○	•	•	• •	• •	○
	Aniline	•	•	•	•	•	○
	Animal oil	• •	• •	○ ○	• •	• •	• •
B	Beer	• •	• •	• •	• •	• •	•
	Benzene	○	•	•	•	• •	○
	Benzoic acid	○	○	○	○	•	○
	Benzol	•	•	•	•	• •	•
	Boric acid	○	•	•	•	•	○
	Brine	○	○	○	○	• •	○
	Butter	•	•	•	•	• •	○
	Butyl alcohol	○	•	•	•	• •	○
	Butyric acid	○	○	○	○	•	○
C	Calcium chloride	○	○	○	○	•	○
	Carbon disulphide	•	•	•	•	• •	○
	Carbon tetrachloride	•	•	•	•	• •	•
	Carbonated drinks	• •	• •	• •	• •	• •	○
	Caustic soda (20%)	• •	• •	• •	• •	• •	○
	Chlorine water	○	○	○	○	○	○
	Chloroform	○	•	•	•	• •	○
	Citric acid	•	•	•	•	• •	○
	Copper sulphate	•	•	•	•	• •	○
D	Diet oil	• •	• •	• •	• •	• •	•
	Diet fat	• •	• •	• •	• •	• •	○
	Diluted acetic acid	○	○	○	○	• •	○
	Distilled water	• •	• •	• •	• •	• •	○
E	Ethyl acetate	○	○	○	○	•	○
	Ethyl alcohol	○	•	•	•	• •	○
	Ethyl chloride	•	• •	• •	• •	• •	○
F	Flax oil	•	•	•	•	• •	•
	Formaldehyde	○	•	•	•	• •	○
	Formic acid	○	○	○	○	○	○
	Freon 12	○	○	○	○	• •	○
	Fresh water	• •	• •	• •	• •	• •	○
	Fruit juice	•	•	•	•	• •	○

The indicated data are approximate as the corrosion resistance of the above-mentioned steels, according to the conditions of use, is related to the work temperature, the concentration of the chemical agent, the duration of the contact with it, etc.

steel corrosion resistance table

LEGEND

○ = Little resistance - not recommended
• = Average resistance
• • = Good resistance - it can be used

	CHEMICAL AGENT	FERRITIC STAINLESS STEEL INOX	SPECIAL Cr-Ni STAINLESS STEEL HARD INOX	SPECIAL NEW Cr-Ni STAINLESS STEEL HQ INOX	AUSTENITIC STAINLESS STEEL INOX 18/8	AUSTENITIC STAINLESS STEEL INOX 316	CARBON STEEL
G	Gasoline	•	•	•	•	• •	•
	Glycerine	•	•	•	•	• •	○
H	Hydrochloric acid	○	○	○	○	○	○
	Hydrofluoric acid	○	○	○	○	○	○
	Hydrogen peroxide	○	•	•	•	• •	○
I	Iodine	○	○	○	○	○	○
	Iron chloride	○	○	○	○	•	○
L	Lactid acid	○	○	•	•	• •	○
M	Magnesium chloride	○	○	○	○	•	○
	Mercury	○	•	•	•	•	○
	Methyl alcohol	○	•	•	•	• •	○
	Methylene chloride	○	○	•	•	•	○
	Milk	• •	•	• •	• •	• •	•
N	Nitric acid	•	•	•	•	• •	○
O	Oil	• •	• •	• •	• •	• •	• •
	Oil ether	○	•	•	•	• •	○
	Oleic acid	•	•	•	•	•	○
P	Paraffin	• •	• •	• •	• •	• •	• •
	Phenol	○	○	○	○	• •	○
	Phosphoric acid	•	•	•	•	• •	○
	Potassium hydroxine	○	○	○	○	• •	○
S	Sea water	○	○	•	•	• •	○
	Silver nitrate	○	○	○	○	•	○
	Soapy water	• •	• •	• •	• •	• •	○
	Sodium carbonate	•	•	•	•	• •	○
	Sodium chloride	○	○	○	○	•	○
	Sodium hydroxine	○	○	○	○	•	○
	Sodium hypochlorite	○	○	○	○	○	○
	Sodium silicate	○	○	○	○	• •	○
	Sodium sulphate	•	•	•	•	• •	○
	Soft drinks	• •	• •	• •	• •	• •	○
	Sulphuric acid	○	○	○	○	•	○
T	Tartaric acid	○	○	•	•	•	○
	Trichlorethylene	•	•	•	•	• •	•
	Turpentine	• •	• •	• •	• •	• •	○
V	Vegetable juice	•	•	•	•	• •	○
	Vegetable oil	• •	• •	• •	• •	• •	• •
	Vinegar	○	○	•	•	• •	○
W	Whiskey	•	•	•	•	• •	○
	Wine	•	•	•	•	• •	○
X	Xilol	• •	• •	• •	• •	• •	•
Z	Zinc chloride	○	○	○	○	•	○

The indicated data are approximate as the corrosion resistance of the above-mentioned steels, according to the conditions of use, is related to the work temperature, the concentration of the chemical agent, the duration of the contact with it, etc.

Every care has been taken to ensure the accuracy of the information contained in this catalogue
but no liability can be accepted for any errors or omissions.

Adeptrans Cadenas y Transmisiones S.L.

Plastic Chains ED01

MakesMoving

916 926 286 · info@adeptrans.es

materials

D

ACETAL RESIN
The acetal resin offers very good mechanical specifications, excellent wear resistance and a low coefficient of friction. Used in the manufacturing of plates for flat top chains, it is an economical alternative to our LFA material. FDA (Food and Drug Administration) approved for direct contact with food.

Working temperatures:
- 40° C / + 80° C
(dry environment)
- 40° C / + 65° C
(wet environment)

Colour: grey, white



LFA / WAF / WLF

LOW FRICTION ACETAL RESIN
This material has a low coefficient of friction, high wear resistance and excellent resistance to chain tension.
It is recommended for high load, high speed applications. FDA (Food and Drug Administration) approved for direct contact with food.

Working temperatures:
- 40° C / + 80° C
(dry environment)
- 40° C / + 65° C
(wet environment)

LFA colours: light brown, blue
WAF/WLF colour: white

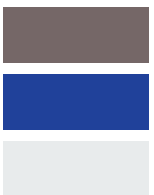

SP

SUPER PERFORMANCE ACETAL RESIN
The super performance resin has a lower coefficient of friction than LFA material. Plate wear and pitch elongation are reduced; it is suitable for high speed applications and reduced lubrication. FDA (Food and Drug Administration) approved for direct contact with food.

Working temperatures:
- 40° C / + 80° C
(dry environment)
- 40° C / + 65° C
(wet environment)

Colour: dark grey



SLX

EXTRA ADDITIVATED ACETAL RESIN
Internally lubricated polyacetal for high-speed applications. Recommended on application for PET containers and bottling lines. Increased wear resistance.
FDA (Food and Drug Administration) approved for direct contact with food.

Working temperatures:
- 40° C / + 80° C
(dry environment)
- 40° C / + 65° C
(wet environment)

Colour: light grey



AK

HIGH WEAR RESISTANT ACETAL RESIN
Very special material with aramidic fibers and low friction coefficient recommended on dry applications for glass container, PET container and bottling lines.

Working temperatures:
- 40° C / + 80° C
(dry environment)
- 40° C / + 65° C
(wet environment)

Colour: dark grey, yellow



WRX

WEAR RESISTANT POLYAMIDE COMPOSITE
It is especially wear resistant in abrasive environment and it is suitable for conveying glass containers, mechanical components, sand, etc.

Working temperatures:
- 20° C / + 120° C
(dry environment)

Colour: black



AS

ANTISTATIC ACETAL RESIN
This material offers great protection against static electrical charges. It is ideal for explosive atmosphere and where an electrostatic force may cause product instability.

Working temperatures:
- 40° C / + 80° C
(dry environment)
- 40° C / + 65° C
(wet environment)

Colour: black

PPB

CHEMICAL RESISTANT REINFORCED POLYPROPYLENE
This improved polypropylene has acid and corrosion resistance characteristics; it is specially recommended when a chain is exposed to chemical agents.

Working temperatures:
+ 5° C / + 105° C
(dry environment)
+ 5° C / + 105° C
(wet environment)

PPB chains dimensions are larger than those indicated in the drawing. To know dimensions refer to our Technical Department.

Colour: white

PBT

EXTRA PERFORMANCE POLYESTER RESIN (Available upon request)
It has a very low coefficient of friction and offers an excellent wear resistance. Plate wear and pitch elongation are reduced. It is specially developed for high speed and dry running applications.

Working temperatures:
- 40° C / + 125° C
(dry environment)
- 40° C / + 60° C
(wet environment)

Colour: green, white, black

HT

GLASS REINFORCED POLYESTER RESIN (Available upon request)
Material with an extremely high resistance to the heat and wear.
FDA (Food and Drug Administration) approved for direct contact with food.

Working temperatures:
- 40° C / + 140° C
(dry environment)

Colour: black, white

SYMBOLS

ZERO GAP
ZERO GAP
It improves the stability of the trasported product.

PINS D TYPE
PINS D TYPE
Better seal on the hinge.

thermoplastic straight running chains

SINGLE HINGE - 820 SERIES



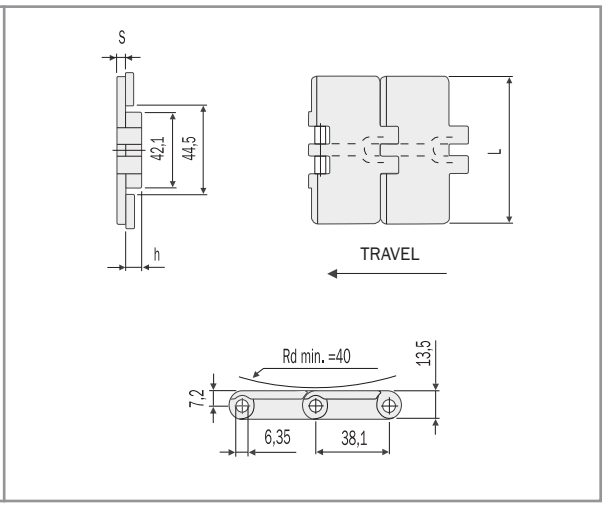

D 820 - ACETAL RESIN

• Plates in self-lubricating acetal resin, grey-coloured.
• Pins in special chrome-nickel stainless steel, work hardened for high resistance.

p.169 p.210 p.230 p.232

PRODUCT CODE	INTERNAL CODE	CHARACTERISTICS				
		Width L (mm)	Thickness S (mm)	Height h (mm)	Working Load Max N (21°C)	Weight kg/m
D 820 K250	6.00.020	63.5	4	9.5	1230	0.73
D 820 K325	6.00.040	82.5	4	9.5	1230	0.83
D 820 K343	6.00.043	87.0	4	9.5	1230	0.85
D 820 K350	6.00.060	88.9	4	9.5	1230	0.85
D 820 K400	6.00.070	101.6	4	9.5	1230	0.95
D 820 K450	6.00.080	114.3	4	9.5	1230	1.03
D 820 K600	6.00.100	152.4	4	9.5	1230	1.25
D 820 K750	6.00.110	190.5	4	9.5	1230	1.47

LFA 820 - LOW FRICTION ACETAL RESIN

• Plates in self-lubricating low friction acetal resin, light brown-coloured.
• Pins in special chrome-nickel stainless steel, work hardened for high resistance.

p.169 p.210 p.230 p.232

PRODUCT CODE	INTERNAL CODE	CHARACTERISTICS				
		Width L (mm)	Thickness S (mm)	Height h (mm)	Working Load Max N (21°C)	Weight kg/m
LFA 820 K250	6.10.020	63.5	4	9.5	1230	0.73
LFA 820 K325	6.10.040	82.5	4	9.5	1230	0.83
LFA 820 K330	6.10.042	83.8	4	9.5	1230	0.83
LFA 820 K343	6.10.043	87.0	4	9.5	1230	0.85
LFA 820 K350	6.10.060	88.9	4	9.5	1230	0.85
LFA 820 K400	6.10.070	101.6	4	9.5	1230	0.95
LFA 820 K450	6.10.080	114.3	4	9.5	1230	1.03
LFA 820 K500	6.10.090	127.0	4	9.5	1230	1.10
LFA 820 K600	6.10.100	152.4	4	9.5	1230	1.25
LFA 820 K750	6.10.110	190.5	4	9.5	1230	1.47

- Standard shipping lengths = 80 pitches = 10 feet = 3,048 metres.
- The above-mentioned chains can also be produced in acetal resin, white-coloured. (FOR D820)
- These chains can be supplied either with pins in austenitic stainless steel, work hardened, highly wear resistant, or with pins in thermoplastic resin.

SP 820 - SUPER PERFORMANCE ACETAL RESIN

p.169 p.210 p.230 p.232

• Plates in self-lubricating very low friction acetal resin, dark grey-coloured.
• Pins in special chrome-nickel stainless steel, work hardened for high resistance.

PRODUCT CODE	INTERNAL CODE	CHARACTERISTICS				
		Width L (mm)	Thickness S (mm)	Height h (mm)	Working Load Max N (21°C)	Weight kg/m
SP 820 K325	6.20.040	82.5	4	9.5	1230	0.83
SP 820 K330	6.20.042	83.8	4	9.5	1230	0.83
SP 820 K343	6.20.043	87.0	4	9.5	1230	0.85
SP 820 K350	6.20.060	88.9	4	9.5	1230	0.87
SP 820 K400	6.20.070	101.6	4	9.5	1230	0.95
SP 820 K450	6.20.080	114.3	4	9.5	1230	1.03
SP 820 K600	6.20.100	152.4	4	9.5	1230	1.25
SP 820 K750	6.20.110	190.5	4	9.5	1230	1.47

- Standard shipping lengths = 80 pitches = 10 feet = 3,048 metres.
- These chains can be supplied either with pins in austenitic stainless steel, work hardened, highly wear resistant, or with pins in thermoplastic resin.

AK 820 - HIGH WEAR RESISTANT ACETAL RESIN

p.169 p.210 p.230 p.232

• Plates in a very special acetal resin with aramidic fibers, dark grey-coloured.
• Pins in special chrome-nickel stainless steel, work hardened for high resistance.

PRODUCT CODE	INTERNAL CODE	CHARACTERISTICS				
		Width L (mm)	Thickness S (mm)	Height h (mm)	Working Load Max N (21°C)	Weight kg/m
AK 820 K325	6.80.040	82.5	4	9.5	1230	0.83
AK 820 K330	6.80.042	83.8	4	9.5	1230	0.83
AK 820 K343	6.80.043	87.0	4	9.5	1230	0.85
AK 820 K350	6.80.060	88.9	4	9.5	1230	0.87
AK 820 K400	6.80.070	101.6	4	9.5	1230	0.95
AK 820 K450	6.80.080	114.3	4	9.5	1230	1.03
AK 820 K600	6.80.100	152.4	4	9.5	1230	1.25
AK 820 K750	6.80.110	190.5	4	9.5	1230	1.47

- Standard shipping lengths = 80 pitches = 10 feet = 3,048 metres.
- The above-mentioned chains can also be produced in special acetal resin, with aramidic fibers yellow-coloured.
- These chains can be supplied either with pins in austenitic stainless steel, work hardened, highly wear resistant, or with pins in thermoplastic resin.

WRX 820 - WEAR RESISTANT POLYAMIDE COMPOSITE

p.169 p.210 p.230 p.232

• Plates in thermoplastic wear resistant polyamide composite, black-coloured.
• Pins in special chrome-nickel stainless steel, work hardened for high resistance.

PRODUCT CODE	INTERNAL CODE	CHARACTERISTICS				
		Width L (mm)	Thickness S (mm)	Height h (mm)	Working Load Max N (21°C)	Weight kg/m
WRX 820 K325	6.50.040	82.5	4	9.5	1230	0.83
WRX 820 K343	6.50.043	87.0	4	9.5	1230	0.85
WRX 820 K350	6.50.060	88.9	4	9.5	1230	0.87
WRX 820 K400	6.50.070	101.6	4	9.5	1230	0.95
WRX 820 K450	6.50.080	114.3	4	9.5	1230	1.03

- Standard shipping lengths = 80 pitches = 10 feet = 3,048 metres.
- These chains can be supplied either with pins in austenitic stainless steel, work hardened, highly wear resistant.

AS 820 - ANTISTATIC ACETAL RESIN

p.169 p.210 p.230 p.232

• Plates in antistatic conductive acetal resin, black-coloured.
• Pins in special chrome-nickel stainless steel, work hardened for high resistance.

PRODUCT CODE	INTERNAL CODE	CHARACTERISTICS				
		Width L (mm)	Thickness S (mm)	Height h (mm)	Working Load Max N (21°C)	Weight kg/m
AS 820 K325	6.30.040	82.5	4	9.5	1230	0.83
AS 820 K350	6.30.060	88.9	4	9.5	1230	0.87
AS 820 K400	6.30.070	101.6	4	9.5	1230	0.95
AS 820 K450	6.30.080	114.3	4	9.5	1230	1.03
AS 820 K600	6.30.100	152.4	4	9.5	1230	1.25
AS 820 K750	6.30.110	190.5	4	9.5	1230	1.47

- Standard shipping lengths = 80 pitches = 10 feet = 3,048 metres.
- These chains can be supplied either with pins in austenitic stainless steel, work hardened, highly wear resistant, or with pins in thermoplastic resin.

PPB 820 - CHEMICAL RESISTANT REINFORCED POLYPROPYLENE

p.169 p.210 p.230 p.232

• Plates in chemical resistant reinforced polypropylene, white-coloured.
• Pins in chrome-nickel austenitic stainless steel (18% Chrome – 8% Nickel), work hardened for high resistance.

PRODUCT CODE	INTERNAL CODE	CHARACTERISTICS				
		Width L (mm)	Thickness S (mm)	Height h (mm)	Working Load Max N (21°C)	Weight kg/m
PPB 820 K325	6.40.040	82.5	4	9.5	1000	0.70
PPB 820 K350	6.40.060	88.9	4	9.5	1000	0.74
PPB 820 K400	6.40.070	101.6	4	9.5	1000	0.82
PPB 820 K450	6.40.080	114.3	4	9.5	1000	0.90
PPB 820 K600	6.40.100	152.4	4	9.5	1000	1.05
PPB 820 K750	6.40.110	190.5	4	9.5	1000	1.20

- Standard shipping lengths = 80 pitches = 10 feet = 3,048 metres.
- These chains can be supplied either with pins in austenitic stainless steel, 316 series, work hardened, highly wear resistant, or with pins in reinforced polypropylene.
- PPB chains dimensions are larger than those indicated in the drawing. To know dimensions refer to our Technical Department.

PBT 820 - EXTRA PERFORMANCE POLYESTER RESIN

p.169 p.210 p.230 p.232

• Plates in low friction polyester resin, green-coloured.
• Pins in special chrome-nickel stainless steel, work hardened for high resistance.

PRODUCT CODE	INTERNAL CODE	CHARACTERISTICS				
		Width L (mm)	Thickness S (mm)	Height h (mm)	Working Load Max N (21°C)	Weight kg/m
PBT 820 K325	6.70.040	82.5	4	9.5	1230	0.83
PBT 820 K350	6.70.060	88.9	4	9.5	1230	0.85
PBT 820 K400	6.70.070	101.6	4	9.5	1230	0.95
PBT 820 K450	6.70.080	114.3	4	9.5	1230	1.03
PBT 820 K600	6.70.100	152.4	4	9.5	1230	1.25
PBT 820 K750	6.70.110	190.5	4	9.5	1230	1.47

- Standard shipping lengths = 80 pitches = 10 feet = 3,048 metres.
- The above-mentioned chains can also be produced in extra performance polyester resin, white-coloured.
- These chains can be supplied either with pins in austenitic stainless steel, work hardened, highly wear resistant, or with pins in thermoplastic resin.

thermoplastic straight running chains

SINGLE HINGE - 831 SERIES - REINFORCED TOP PLATE

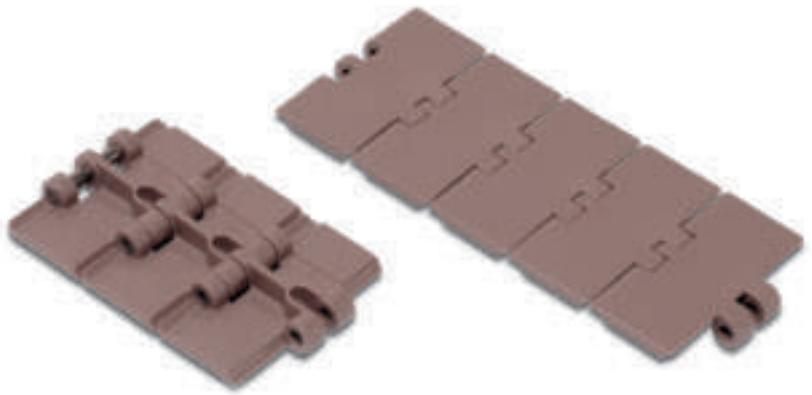

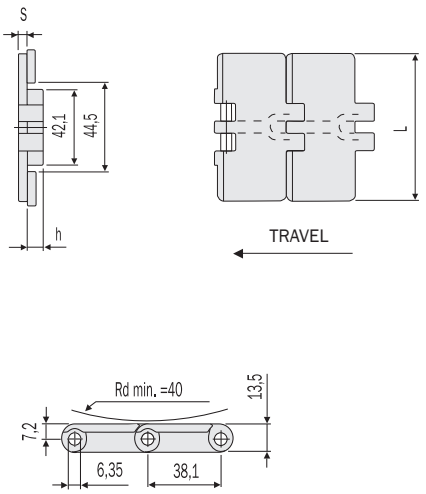

LFA 831 - LOW FRICTION ACETAL RESIN

p.169 p.210 p.230 p.232

• Plates in self-lubricating low friction acetal resin, light brown-coloured. **Top plate thickness 4,8mm.**
• Pins in special chrome-nickel stainless steel, work hardened for high resistance.

PRODUCT CODE	INTERNAL CODE	CHARACTERISTICS				
		Width L (mm)	Thickness S (mm)	Height h (mm)	Working Load Max N (21°C)	Weight kg/m
LFA 831 K325	6.11.040	82.5	4,8	8.7	1230	1.00
LFA 831 K330	6.11.042	83.8	4,8	8.7	1230	1.02
LFA 831 K400	6.11.070	101.6	4,8	8.7	1230	1.15
LFA 831 K450	6.11.080	114.3	4,8	8.7	1230	1.24
LFA 831 K600	6.11.100	152.4	4,8	8.7	1230	1.51
LFA 831 K750	6.11.110	190.5	4,8	8.7	1230	1.76

- Standard shipping lengths = 80 pitches = 10 feet = 3,048 metres.
- These chains can be supplied either with pins in austenitic stainless steel, work hardened, highly wear resistant, or with pins in thermoplastic resin.

SP 831 - SUPER PERFORMANCE ACETAL RESIN

p.169 p.210 p.230 p.232

• Plates in self-lubricating very low friction acetal resin, dark grey-coloured.
• Pins in special chrome-nickel stainless steel, work hardened for high resistance.

PRODUCT CODE	INTERNAL CODE	CHARACTERISTICS				
		Width L (mm)	Thickness S (mm)	Height h (mm)	Working Load Max N (21°C)	Weight kg/m
SP 831 K325	6.21.040	82.5	4,8	8.7	1230	1.00
SP 831 K330	6.21.042	83.8	4,8	8.7	1230	1.02
SP 831 K400	6.21.070	101.6	4,8	8.7	1230	1.15
SP 831 K450	6.21.080	114.3	4,8	8.7	1230	1.24
SP 831 K600	6.21.100	152.4	4,8	8.7	1230	1.51
SP 831 K750	6.21.110	190.5	4,8	8.7	1230	1.76

- Standard shipping lengths = 80 pitches = 10 feet = 3,048 metres.
- These chains can be supplied either with pins in austenitic stainless steel, work hardened, highly wear resistant, or with pins in thermoplastic resin.

916 926 286 - info@adeptrans.es

thermoplastic straight running chains

SINGLE REINFORCED HINGE - 828 SERIES - HIGH LOAD CAPACITY



ZERO GAP

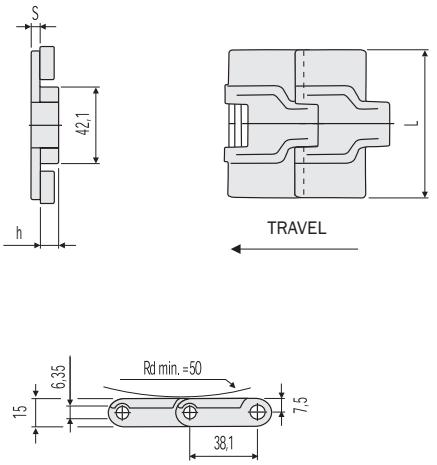

LFA 828 - LOW FRICTION ACETAL RESIN

p.182 p.211 p.230 p.232

- Plates in self-lubricating low friction acetal resin, light brown-coloured.
- Pins in special chrome-nickel stainless steel, work hardened for high resistance.

PRODUCT CODE	INTERNAL CODE	CHARACTERISTICS				
		Width L (mm)	Thickness S (mm)	Height h (mm)	Working Load Max N (21°C)	Weight kg/m
LFA 828 K325	6.18.240	82.5	4	11	2100	1.05
LFA 828 K330	6.18.242	83.8	4	11	2100	1.08

SP 828 - SUPER PERFORMANCE ACETAL RESIN

p.182 p.211 p.230 p.232

- Plates in self-lubricating very low friction acetal resin, dark grey-coloured.
- Pins in special chrome-nickel stainless steel, work hardened for high resistance.

PRODUCT CODE	INTERNAL CODE	CHARACTERISTICS				
		Width L (mm)	Thickness S (mm)	Height h (mm)	Working Load Max N (21°C)	Weight kg/m
SP 828 K325	6.28.240	82.5	4	11	2100	1.05
SP 828 K330	6.28.242	83.8	4	11	2100	1.08

AK 828 - HIGH WEAR RESISTANT ACETAL RESIN

p.182 p.211 p.230 p.232

- Plates in a very special acetal resin with aramidic fibers, dark grey-coloured.
- Pins in special chrome-nickel stainless steel, work hardened for high resistance.

PRODUCT CODE	INTERNAL CODE	CHARACTERISTICS				
		Width L (mm)	Thickness S (mm)	Height h (mm)	Working Load Max N (21°C)	Weight kg/m
AK 828 K325	6.88.240	82.5	4	11	2100	1.05
AK 828 K330	6.88.242	83.8	4	11	2100	1.08

- Standard shipping lengths = 80 pitches = 10 feet = 3,048 metres.
- The above-mentioned chains can also be produced in special acetal resin, with aramidic fibers yellow-coloured. (FOR AK 828)
- These chains can be supplied either with pins in austenitic stainless steel, work hardened, highly wear resistant, or with pins in thermoplastic resin.

thermoplastic straight running chains

SINGLE REINFORCED HINGE - 8257 SERIES



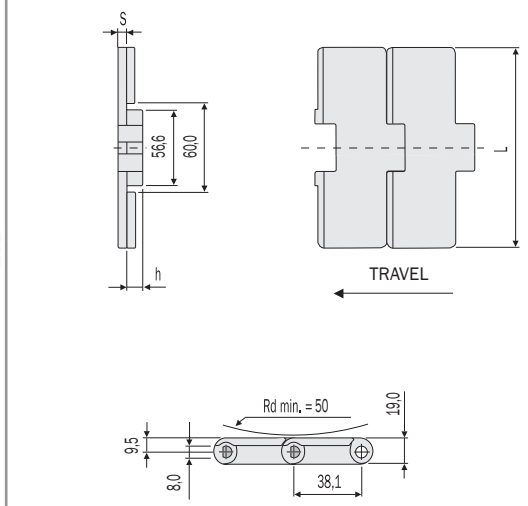

LFA 8257 - LOW FRICTION ACETAL RESIN

p.188 p.212 p.230 p.232

• Plates in self-lubricating low friction acetal resin, light brown-coloured.
• Pins in special stainless steel, 400 series, work hardened, magnetic, highly wear resistant.

PRODUCT CODE	INTERNAL CODE	CHARACTERISTICS				
		Width L (mm)	Thickness S (mm)	Height h (mm)	Working Load Max N (21°C)	Weight kg/m
LFA 8257 K750	6.10.175	190.5	4,8	14.2	3830	2.20
LFA 8257 K1000	6.10.185	254.0	4,8	14.2	3830	2.55
LFA 8257 K1200	6.10.195	304.8	4,8	14.2	3830	2.90

- Standard shipping lengths = 80 pitches = 10 feet = 3,048 metres.
- These chains can be supplied either with pins in austenitic stainless steel, work hardened, highly wear resistant, or with pins in thermoplastic resin.

SP 8257 - SUPER PERFORMANCE ACETAL RESIN

p.188 p.212 p.230 p.232

• Plates in self-lubricating very low friction acetal resin, dark grey coloured.
• Pins in special stainless steel, 400 series, work hardened, magnetic, highly wear resistant.

PRODUCT CODE	INTERNAL CODE	CHARACTERISTICS				
		Width L (mm)	Thickness S (mm)	Height h (mm)	Working Load Max N (21°C)	Weight kg/m
SP 8257 K750	6.20.175	190.5	4,8	14.2	3830	2.20
SP 8257 K1000	6.20.185	254.0	4,8	14.2	3830	2.55
SP 8257 K1200	6.20.195	304.8	4,8	14.2	3830	2.90

- Standard shipping lengths = 80 pitches = 10 feet = 3,048 metres.
- These chains can be supplied either with pins in austenitic stainless steel, work hardened, highly wear resistant, or with pins in thermoplastic resin.

thermoplastic straight running chains

DOUBLE HINGE - 821 SERIES



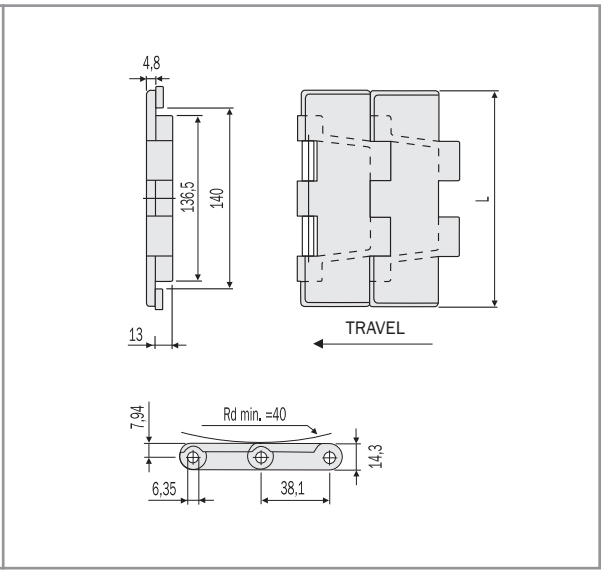

LFA 821 - LOW FRICTION ACETAL RESIN

p.176 p.211 p.230 p.232

- Plates in self-lubricating low friction acetal resin, light brown-coloured.
- Pins in special chrome-nickel stainless steel, work hardened for high resistance.

PRODUCT CODE	INTERNAL CODE	CHARACTERISTICS		
		Width L (mm)	Working Load Max N (21°C)	Weight kg/m
LFA 821 K750	6.14.110	190.5	2680	2.50
LFA 821 K1000	6.14.120	254.0	2680	2.95
LFA 821 K1200	6.14.130	304.8	2680	3.25

SP 821 - SUPER PERFORMANCE ACETAL RESIN

p.176 p.211 p.230 p.232

- Plates in self-lubricating very low friction acetal resin, dark grey-coloured.
- Pins in special chrome-nickel stainless steel, work hardened for high resistance.

PRODUCT CODE	INTERNAL CODE	CHARACTERISTICS		
		Width L (mm)	Working Load Max N (21°C)	Weight kg/m
SP 821 K750	6.24.110	190.5	2680	2.50
SP 821 K1000	6.24.120	254.0	2680	2.95
SP 821 K1200	6.24.130	304.8	2680	3.25

PPB 821 - CHEMICAL RESISTANT REINFORCED POLYPROPYLENE

p.176 p.211 p.230 p.232

- Plates in chemical resistant reinforced polypropylene, white-coloured.
- Pins in chrome-nickel austenitic stainless steel (18% Chrome - 8% Nickel), work hardened for high resistance.

PRODUCT CODE	INTERNAL CODE	CHARACTERISTICS		
		Width L (mm)	Working Load Max N (21°C)	Weight kg/m
PPB 821 K750	6.44.110	190.5	2680	2.50
PPB 821 K1000	6.44.120	254.0	2680	2.95
PPB 821 K1200	6.44.130	304.8	2680	3.25

- Standard shipping lengths = 80 pitches = 10 feet = 3,048 metres.
- These chains can be supplied with pins in austenitic stainless steel, work hardened, highly wear resistant. (FOR LFA 821 - SP 821)
- These chains can be supplied with pins in austenitic stainless steel, 316 series, work hardened, highly wear resistant. (FOR PPB 821)
- PPB chains dimensions are larger than those indicated in the drawing. To know dimensions refer to our Technical Department.

thermoplastic sideflexing chains

880 / 879 BEVEL SERIES

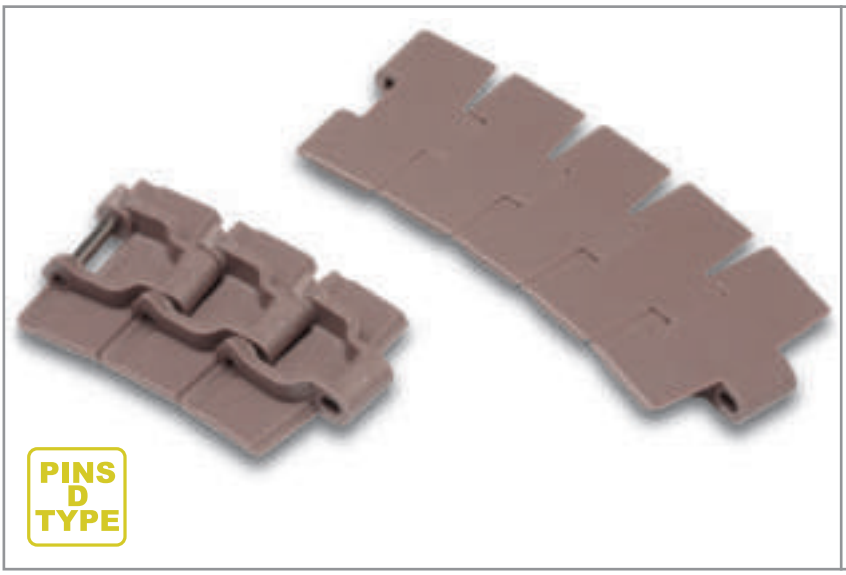

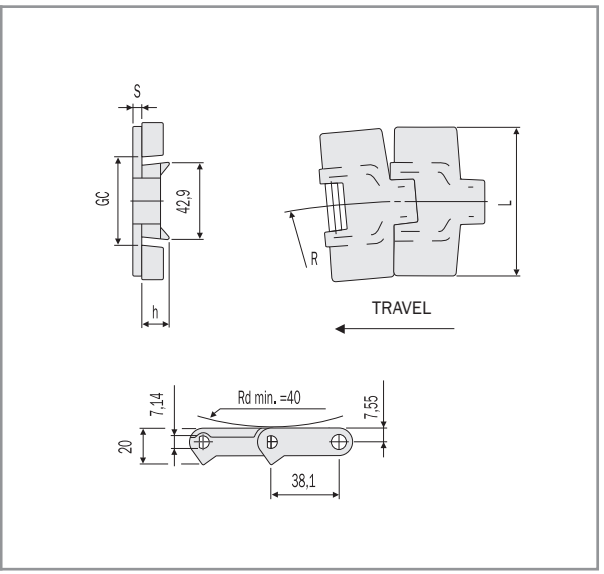

LFA 880 - LOW FRICTION ACETAL RESIN

p.182 p.212 p.220 p.229 p.232

• Plates in self-lubricating low friction acetal resin, light brown-coloured.
• Pins in special chrome-nickel stainless steel, work hardened for high resistance.

PRODUCT CODE	INTERNAL CODE	CHARACTERISTICS							
		L (mm)	S (mm)	h (mm)	R (mm)	GC st. (mm)	GC sid. (mm)	Work. Load Max N (21°C)	Weight kg/m
LFA 880 K325	6.12.040	82.5	4	16	400	44.5	41.4	2100	0.89
LFA 880 K330	6.12.044	83.8	4	16	400	44.5	41.4	2100	0.90
LFA 880 K350	6.12.060	88.9	4	16	400	44.5	41.4	2100	0.91
LFA 880 K450	6.12.080	114.3	4	16	400	44.5	41.4	2100	1.04
LFA 880 K750	6.12.110	190.5	4	16	400	44.5	41.4	2100	1.40

- Standard shipping lengths = 80 pitches = 10 feet = 3,048 metres.
- These chains can be supplied either with pins in austenitic stainless steel, work hardened, highly wear resistant or with pins in thermoplastic resin.

LFA 879 - LOW FRICTION ACETAL RESIN

TOP PLATE
THICKNESS 4,8mm

p.182 p.212 p.220 p.229 p.232

• Plates in self-lubricating low friction acetal resin, light brown-coloured.
• Pins in special chrome-nickel stainless steel, work hardened for high resistance.

PRODUCT CODE	INTERNAL CODE	CHARACTERISTICS							
		L (mm)	S (mm)	h (mm)	R (mm)	GC st. (mm)	GC sid. (mm)	Work. Load Max N (21°C)	Weight kg/m
LFA 879 K325	6.13.040	82.5	4.8	15.2	400	44.5	41.4	2100	0.93
LFA 879 K330	6.13.042	83.8	4.8	15.2	400	44.5	41.4	2100	0.97
LFA 879 K350	6.13.060	88.9	4.8	15.2	400	44.5	41.4	2100	1.05
LFA 879 K450	6.13.080	114.3	4.8	15.2	400	44.5	41.4	2100	1.10

- Standard shipping lengths = 80 pitches = 10 feet = 3,048 metres.
- These chains can be supplied either with pins in austenitic stainless steel, work hardened, highly wear resistant or with pins in thermoplastic resin.

thermoplastic sideflexing chains

880 TAB SERIES

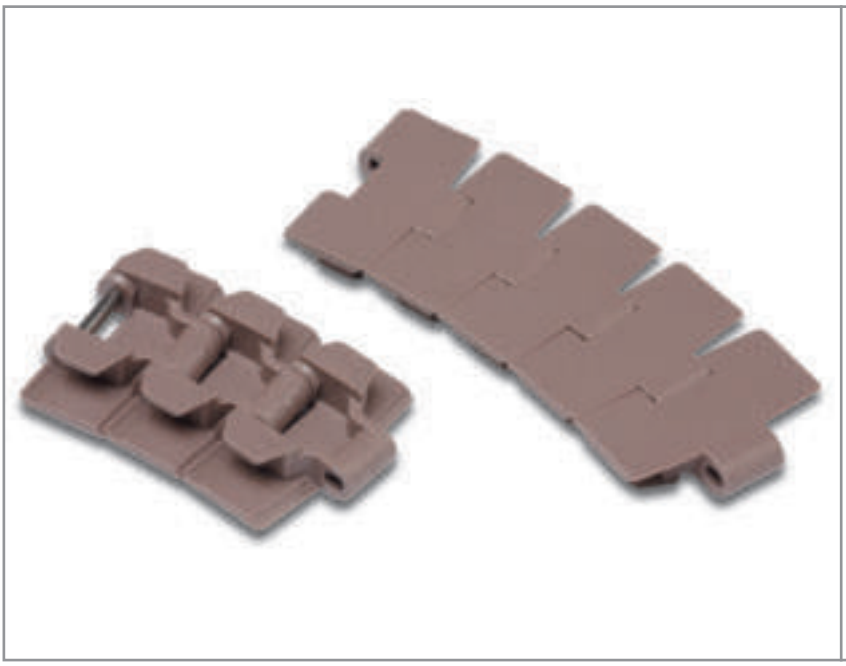

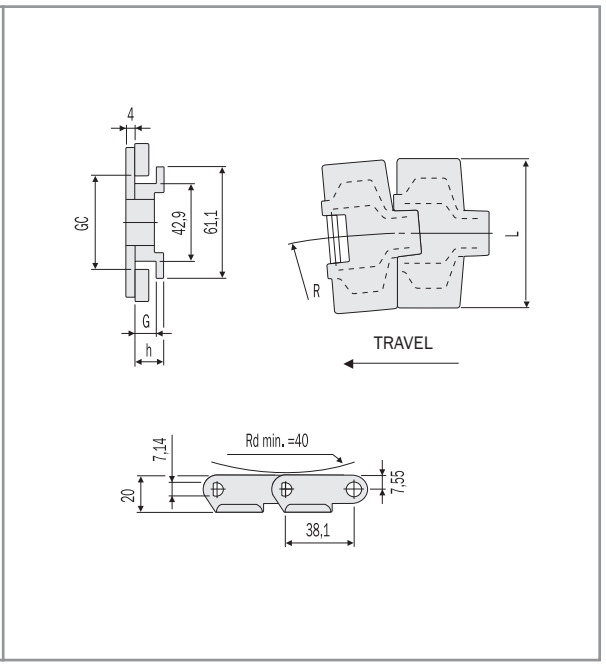

D 880 TAB - ACETAL RESIN

p.182 p.212 p.218 p.228 p.232

• Plates in self-lubricating acetal resin, grey-coloured.
• Pins in special chrome-nickel stainless steel, work hardened for high resistance.

PRODUCT CODE	INTERNAL CODE	CHARACTERISTICS							
		L (mm)	h (mm)	R (mm)	G (mm)	GC st. (mm)	GC sid. (mm)	Work. Load Max N (21°C)	Weight kg/m
D 880 TAB K325	6.02.041	82.5	16	400	11.5	46	44.2	2100	0.94
D 880 TAB K350	6.02.061	88.9	16	400	11.5	46	44.2	2100	1.01
D 880 TAB K450	6.02.081	114.3	16	400	11.5	46	44.2	2100	1.08
D 880 TAB K750	6.02.111	190.5	16	400	11.5	46	44.2	2100	1.48

- Standard shipping lengths = 80 pitches = 10 feet = 3,048 metres.
- The above-mentioned chains can also be produced in acetal resin, white-coloured.
- These chains can be supplied either with pins in austenitic stainless steel, work hardened, highly wear resistant, or with pins in thermoplastic resin.

LFA 880 TAB - LOW FRICTION ACETAL RESIN

p.182 p.212 p.218 p.228 p.232

• Plates in self-lubricating low friction acetal resin, light brown-coloured.
• Pins in special chrome-nickel stainless steel, work hardened for high resistance.

PRODUCT CODE	INTERNAL CODE	CHARACTERISTICS							
		L (mm)	h (mm)	R (mm)	G (mm)	GC st. (mm)	GC sid. (mm)	Work. Load Max N (21°C)	Weight kg/m
LFA 880 TAB K250	6.12.021	63.5	16	400	11.5	46	44.2	2100	0.80
LFA 880 TAB K325	6.12.041	82.5	16	400	11.5	46	44.2	2100	0.94
LFA 880 TAB K330	6.12.042	83.8	16	400	11.5	46	44.2	2100	0.96
LFA 880 TAB K343	6.12.043	87.0	16	400	11.5	46	44.2	2100	0.99
LFA 880 TAB K350	6.12.061	88.9	16	400	11.5	46	44.2	2100	1.01
LFA 880 TAB K450	6.12.081	114.3	16	400	11.5	46	44.2	2100	1.08
LFA 880 TAB K600	6.12.101	152.4	16	400	11.5	46	44.2	2100	1.28
LFA 880 TAB K750	6.12.111	190.5	16	400	11.5	46	44.2	2100	1.48

- Standard shipping lengths = 80 pitches = 10 feet = 3,048 metres.
- These chains can be supplied either with pins in austenitic stainless steel, work hardened, highly wear resistant, or with pins in thermoplastic resin.

SP 880 TAB - SUPER PERFORMANCE ACETAL RESIN

p.182 p.212 p.218 p.228 p.232

• Plates in self-lubricating very low friction acetal resin, dark grey-coloured.
• Pins in special chrome-nickel stainless steel, work hardened for high resistance.

PRODUCT CODE	INTERNAL CODE	CHARACTERISTICS							
		L (mm)	h (mm)	R (mm)	G (mm)	GC st. (mm)	GC sid. (mm)	Work. Load Max N (21°C)	Weight kg/m
SP 880 TAB K250	6.22.021	63.5	16	400	11.5	46	44.2	2100	0.80
SP 880 TAB K325	6.22.041	82.5	16	400	11.5	46	44.2	2100	0.94
SP 880 TAB K343	6.22.043	87.0	16	400	11.5	46	44.2	2100	0.99
SP 880 TAB K350	6.22.061	88.9	16	400	11.5	46	44.2	2100	1.01
SP 880 TAB K450	6.22.081	114.3	16	400	11.5	46	44.2	2100	1.08
SP 880 TAB K600	6.22.101	152.4	16	400	11.5	46	44.2	2100	1.28
SP 880 TAB K750	6.22.111	190.5	16	400	11.5	46	44.2	2100	1.48

AK 880 TAB - HIGH WEAR RESISTANT ACETAL RESIN

p.182 p.212 p.218 p.228 p.232

• Plates in a very special acetal resin with aramidic fibers, dark grey-coloured.
• Pins in special chrome-nickel stainless steel, work hardened for high resistance.

PRODUCT CODE	INTERNAL CODE	CHARACTERISTICS							
		L (mm)	h (mm)	R (mm)	G (mm)	GC st. (mm)	GC sid. (mm)	Work. Load Max N (21°C)	Weight kg/m
AK 880 TAB K250	6.82.021	63.5	16	400	11.5	46	44.2	2100	0.80
AK 880 TAB K325	6.82.041	82.5	16	400	11.5	46	44.2	2100	0.94
AK 880 TAB K343	6.82.043	87.0	16	400	11.5	46	44.2	2100	0.99
AK 880 TAB K350	6.82.061	88.9	16	400	11.5	46	44.2	2100	1.01
AK 880 TAB K450	6.82.081	114.3	16	400	11.5	46	44.2	2100	1.08
AK 880 TAB K600	6.82.101	152.4	16	400	11.5	46	44.2	2100	1.28
AK 880 TAB K750	6.82.111	190.5	16	400	11.5	46	44.2	2100	1.48

AS 880 TAB - ANTISTATIC ACETAL RESIN

p.182 p.212 p.218 p.228 p.232

• Plates in antistatic conductive acetal resin, black-coloured.
• Pins in special chrome-nickel stainless steel, work hardened for high resistance.

PRODUCT CODE	INTERNAL CODE	CHARACTERISTICS							
		L (mm)	h (mm)	R (mm)	G (mm)	GC st. (mm)	GC sid. (mm)	Work. Load Max N (21°C)	Weight kg/m
AS 880 TAB K325	6.32.041	82.5	16	400	11.5	46	44.2	2100	0.74
AS 880 TAB K350	6.32.061	88.9	16	400	11.5	46	44.2	2100	1.81
AS 880 TAB K450	6.32.081	114.3	16	400	11.5	46	44.2	2100	1.88
AS 880 TAB K750	6.32.111	190.5	16	400	11.5	46	44.2	2100	1.28

WRX 880 TAB - WEAR RESISTANT POLYAMIDE COMPOSITE

p.182 p.212 p.218 p.228 p.232

• Plates in thermoplastic wear resistant polyamide composite, black-coloured.
• Pins in special chrome-nickel stainless steel, work hardened for high resistance.

PRODUCT CODE	INTERNAL CODE	CHARACTERISTICS							
		L (mm)	h (mm)	R (mm)	G (mm)	GC st. (mm)	GC sid. (mm)	Work. Load Max N (21°C)	Weight kg/m
WRX 880 TAB K325	6.52.041	82.5	16	400	11.5	46	44.2	2100	0.94
WRX 880 TAB K350	6.52.061	88.9	16	400	11.5	46	44.2	2100	1.01
WRX 880 TAB K450	6.52.081	114.3	16	400	11.5	46	44.2	2100	1.08
WRX 880 TAB K750	6.52.111	190.5	16	400	11.5	46	44.2	2100	1.48

- Standard shipping lengths = 80 pitches = 10 feet = 3,048 metres.
- These chains can be supplied either with pins in austenitic stainless steel, work hardened, highly wear resistant, or with pins in thermoplastic resin.
- The above-mentioned chains can also be produced in special acetal resin with aramidic fibers yellow-coloured. (FOR AK 880 TAB)

916 926 286 · info@adeptrans.es

PPB 880 TAB - CHEMICAL RESIST. REINFORCED POLYPROPYLENE

p.182 p.212 p.218 p.228 p.232

• Plates in chemical resistant reinforced polypropylene, white-coloured.
• Pins in chrome-nickel austenitic stainless steel (18% Chrome – 8% Nickel), work hardened for high resistance.

PRODUCT CODE	INTERNAL CODE	CHARACTERISTICS							
		L (mm)	h (mm)	R (mm)	G (mm)	GC st. (mm)	GC sid. (mm)	Work. Load Max N (21°C)	Weight kg/m
PPB 880 TAB K325	6.42.041	82.5	16	400	11.5	46	44.2	1900	0.74
PPB 880 TAB K350	6.42.061	88.9	16	400	11.5	46	44.2	1900	0.81
PPB 880 TAB K450	6.42.081	114.3	16	400	11.5	46	44.2	1900	0.88
PPB 880 TAB K750	6.42.111	190.5	16	400	11.5	46	44.2	1900	1.28

- Standard shipping lengths = 80 pitches = 10 feet = 3,048 metres.
- These chains can be supplied either with pins in austenitic stainless steel 316 series, work hardened, highly wear resistant, or with pins in reinforced polypropylene.
- PPB chains dimensions are larger than those indicated in the drawing. To know dimensions refer to our Technical Department.

PBT 880 TAB - EXTRA PERFORMANCE POLYESTER RESIN

p.182 p.212 p.218 p.228 p.232

• Plates in low friction polyester resin, green-coloured.
• Pins in special chrome-nickel stainless steel, work hardened for high resistance.

PRODUCT CODE	INTERNAL CODE	CHARACTERISTICS							
		L (mm)	h (mm)	R (mm)	G (mm)	GC st. (mm)	GC sid. (mm)	Work. Load Max N (21°C)	Weight kg/m
PBT 880 TAB K325	6.72.041	82.5	16	400	11.5	46	44.2	2100	0.94
PBT 880 TAB K350	6.72.061	88.9	16	400	11.5	46	44.2	2100	1.01
PBT 880 TAB K450	6.72.081	114.3	16	400	11.5	46	44.2	2100	1.08
PBT 880 TAB K750	6.72.111	190.5	16	400	11.5	46	44.2	2100	1.48

- Standard shipping lengths = 80 pitches = 10 feet = 3,048 metres.
- These chains can be supplied either with pins in austenitic stainless steel, work hardened, highly wear resistant, or with pins in thermoplastic resin.
- The above-mentioned chains can also be produced in extra performance polyester resin, white-coloured.

thermoplastic sideflexing chains

879 TAB SERIES

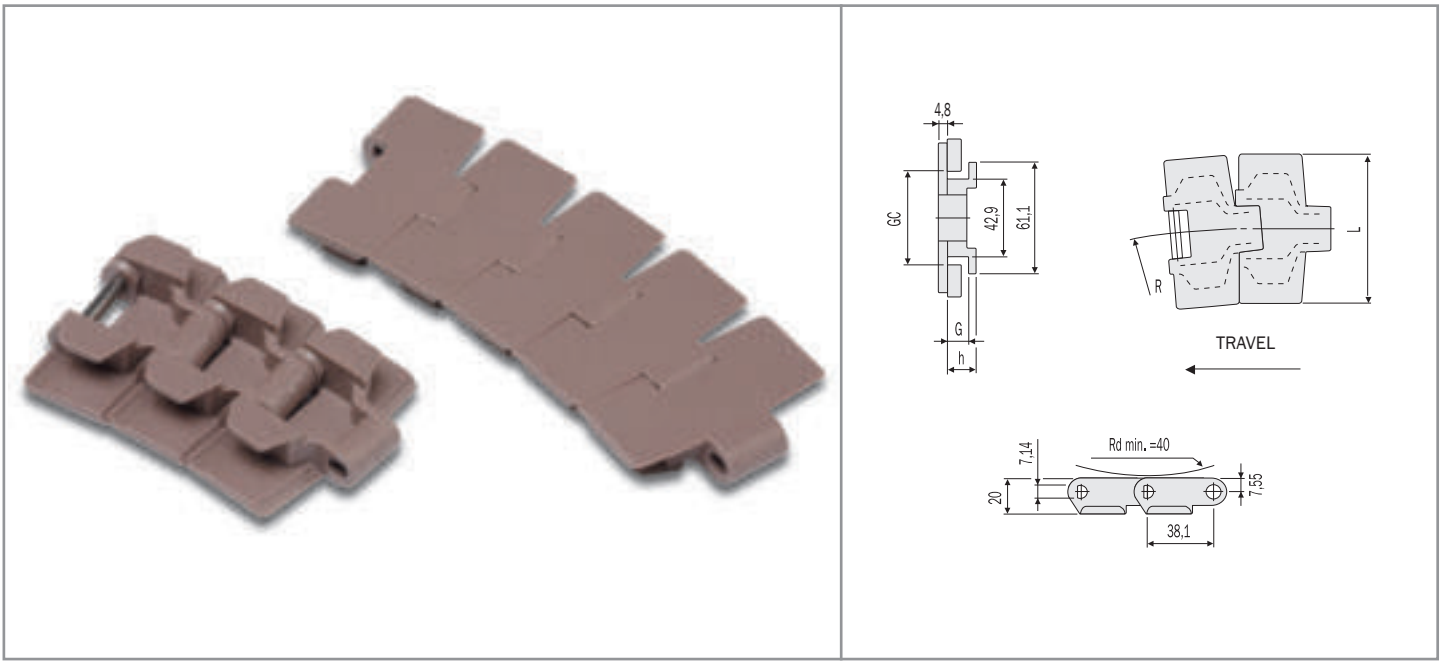

LFA 879 TAB - LOW FRICTION ACETAL RESIN

TOP PLATE THICKNESS 4,8mm

• Plates in self-lubricating low friction acetal resin, light brown-coloured.
• Pins in special chrome-nickel stainless steel, work hardened for high resistance.

p.182 p.212 p.218 p.228 p.232

PRODUCT CODE	INTERNAL CODE	CHARACTERISTICS							
		L (mm)	h (mm)	R (mm)	G (mm)	GC st. (mm)	GC sid. (mm)	Work. Load Max N (21°C)	Weight kg/m
LFA 879 TAB K325	6.13.041	82.5	15.2	400	11	46	44.2	2100	0.98
LFA 879 TAB K330	6.13.242	83.8	15.2	400	11	46	44.2	2100	1.02
LFA 879 TAB K350	6.13.061	88.9	15.2	400	11	46	44.2	2100	1.10
LFA 879 TAB K450	6.13.081	114.3	15.2	400	11	46	44.2	2100	1.14

- Standard shipping lengths = 80 pitches = 10 feet = 3,048 metres.
- These chains can be supplied either with pins in austenitic stainless steel, work hardened, highly wear resistant, or with pins in thermoplastic resin.

SP 879 TAB - SUPER PERFORMANCE ACETAL RESIN

TOP PLATE THICKNESS 4,8mm

• Plates in self-lubricating very low friction acetal resin, dark grey-coloured.
• Pins in special chrome-nickel stainless steel, work hardened for high resistance.

p.182 p.212 p.218 p.228 p.232

PRODUCT CODE	INTERNAL CODE	CHARACTERISTICS							
		L (mm)	h (mm)	R (mm)	G (mm)	GC st. (mm)	GC sid. (mm)	Work. Load Max N (21°C)	Weight kg/m
SP 879 TAB K325	6.23.041	82.5	15.2	400	11	46	44.2	2100	0.98
SP 879 TAB K330	6.23.242	83.8	15.2	400	11	46	44.2	2100	1.02
SP 879 TAB K350	6.23.061	88.9	15.2	400	11	46	44.2	2100	1.10
SP 879 TAB K450	6.23.081	114.3	15.2	400	11	46	44.2	2100	1.14

- Standard shipping lengths = 80 pitches = 10 feet = 3,048 metres.
- These chains can be supplied either with pins in austenitic stainless steel, work hardened, highly wear resistant, or with pins in thermoplastic resin.

thermoplastic sideflexing chains

880 BO / 879 BO SERIES - REDUCED SIDEFLEXING RADIUS R190



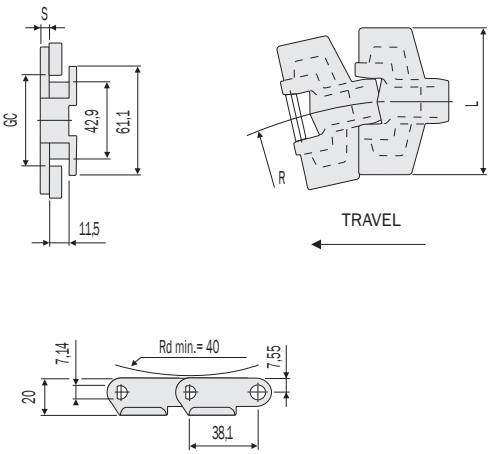

LFA 880 BO - LOW FRICTION ACETAL RESIN

p.182 p.208 p.212 | p.218 | p.228 p.232

- Plates in self-lubricating low friction acetal resin, light brown-coloured.
- Pins in special chrome-nickel stainless steel, work hardened for high resistance.

PRODUCT CODE	INTERNAL CODE	CHARACTERISTICS						
		L (mm)	S (mm)	R (mm)	GC st. (mm)	GC sid. (mm)	Work. Load Max N (21°C)	Weight kg/m
LFA 880 BO K250	6.19.020	63.5	4	190	46	44.2	1680	0.88
LFA 880 BO K325	6.19.040	82.5	4	190	46	44.2	1680	0.96
LFA 880 BO K450	6.19.080	114.3	4	190	46	44.2	1680	1.04

- Standard shipping lengths = 80 pitches = 10 feet = 3,048 metres.
- These chains can be supplied either with pins in austenitic stainless steel, work hardened, highly wear resistant, or with pins in thermoplastic resin.

LFA 879 BO - LOW FRICTION ACETAL RESIN

TOP PLATE THICKNESS 4,8mm

p.182 p.208 p.212 | p.218 | p.228 p.232

- Plates in self-lubricating low friction acetal resin, light brown-coloured.
- Pins in special chrome-nickel stainless steel, work hardened for high resistance.

PRODUCT CODE	INTERNAL CODE	CHARACTERISTICS						
		L (mm)	S (mm)	R (mm)	GC st. (mm)	GC sid. (mm)	Work. Load Max N (21°C)	Weight kg/m
LFA 879 BO K325	6.17.040	82.5	4.8	190	46	44.2	2100	1.08
LFA 879 BO K450	6.17.080	114.3	4.8	190	46	44.2	2100	1.23

- Standard shipping lengths = 80 pitches = 10 feet = 3,048 metres.
- These chains can be supplied either with pins in austenitic stainless steel, work hardened, highly wear resistant, or with pins in thermoplastic resin.

thermoplastic sideflexing chains

878 BO SERIES - REDUCED SIDEFLEXING RADIUS R190



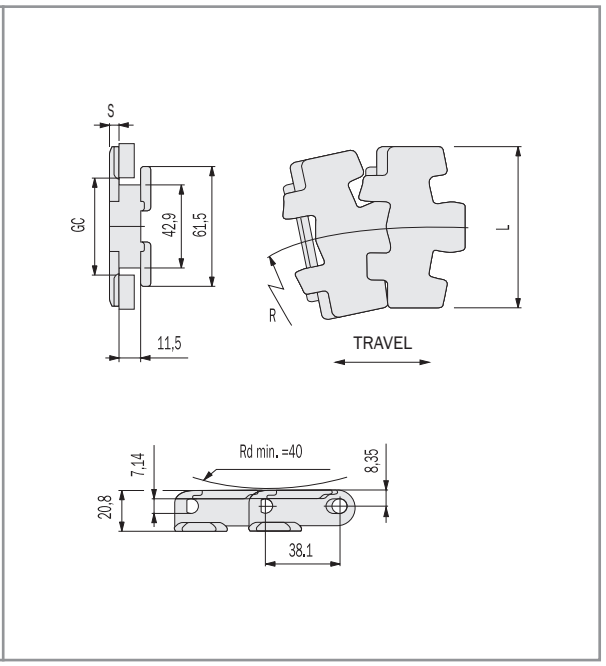

LFA 878 BO - LOW FRICTION ACETAL RESIN

TOP PLATE
THICKNESS 4,8mm

p.182 p.208 p.212 | p.218 | p.228 p.232

- Plates in self-lubricating low friction acetal resin, light brown-coloured.
- Pins in special chrome-nickel stainless steel, work hardened for high resistance.

PRODUCT CODE	INTERNAL CODE	CHARACTERISTICS						
		L (mm)	S (mm)	R (mm)	GC st. (mm)	GC sid. (mm)	Work. Load Max N (21°C)	Weight kg/m
LFA 878 BO K325	6.17.041	82.5	4.8	190	46	44.2	2100	1.08
LFA 878 BO K450	6.17.081	114.3	4.8	190	46	44.2	2100	1.20

- Standard shipping lengths = 80 pitches = 10 feet = 3,048 metres.
- These chains can be supplied either with pins in austenitic stainless steel, work hardened, highly wear resistant, or with pins in thermoplastic resin.

SP 878 BO - SUPER PERFORMANCE ACETAL RESIN

TOP PLATE
THICKNESS 4,8mm

p.182 p.208 p.212 | p.218 | p.228 p.232

- Plates in self-lubricating very low friction acetal resin, dark grey-coloured.
- Pins in special chrome-nickel stainless steel, work hardened for high resistance.

PRODUCT CODE	INTERNAL CODE	CHARACTERISTICS						
		L (mm)	S (mm)	R (mm)	GC st. (mm)	GC sid. (mm)	Work. Load Max N (21°C)	Weight kg/m
SP 878 BO K325	6.27.041	82.5	4.8	190	46	44.2	2100	1.08
SP 878 BO K450	6.27.081	114.3	4.8	190	46	44.2	2100	1.20

- Standard shipping lengths = 80 pitches = 10 feet = 3,048 metres.
- These chains can be supplied either with pins in austenitic stainless steel, work hardened, highly wear resistant, or with pins in thermoplastic resin.

thermoplastic sideflexing chains

ON MAGNETIC TRACKS - 880 M / 879 M SERIES



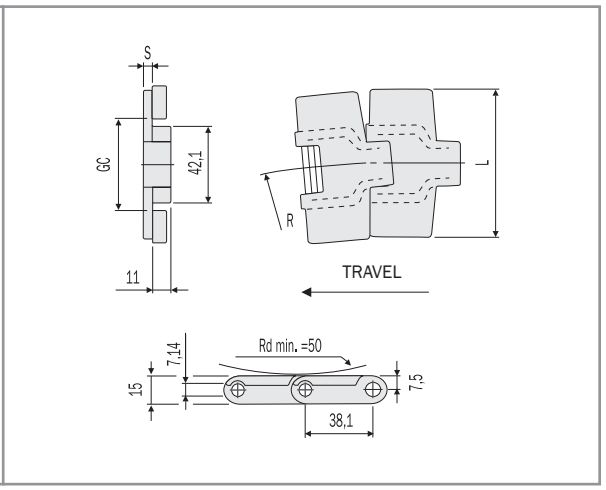

LFA 880 M - LOW FRICTION ACETAL RESIN

p.182 p.212 p.106 p.228 p.232

- Plates in self-lubricating low friction acetal resin, light brown-coloured.
- Pins in special stainless steel, 400 series, work hardened, magnetic, highly wear resistant.

PRODUCT CODE	INTERNAL CODE	CHARACTERISTICS						
	REDUCED PLATE GAP (*)	L (mm)	S (mm)	R (mm)	GC st. (mm)	GC sid. (mm)	Work. Load Max N (21°C)	Weight kg/m
LFA 880 M K325 (*)	6.18.040	82.5	4	500	44	44	2100	1.03
LFA 880 M K330 (*)	6.18.042	83.8	4	500	44	44	2100	1.06
LFA 880 M K350	6.18.060	88.9	4	457	44	44	2100	1.10
LFA 880 M K450	6.18.080	114.3	4	457	44	44	2100	1.16

SP 880 M - SUPER PERFORMANCE ACETAL RESIN

p.182 p.212 p.106 p.228 p.232

- Plates in self-lubricating very low friction acetal resin, dark grey-coloured.
- Pins in special stainless steel, 400 series, work hardened, magnetic, highly wear resistant.

PRODUCT CODE	INTERNAL CODE	CHARACTERISTICS						
	REDUCED PLATE GAP (*)	L (mm)	S (mm)	R (mm)	GC st. (mm)	GC sid. (mm)	Work. Load Max N (21°C)	Weight kg/m
SP 880 M K325 (*)	6.28.040	82.5	4	500	44	44	2100	1.03
SP 880 M K330 (*)	6.28.042	83.8	4	500	44	44	2100	1.06
SP 880 M K350	6.28.060	88.9	4	457	44	44	2100	1.10
SP 880 M K450	6.28.080	114.3	4	457	44	44	2100	1.16

LFA 879 M - LOW FRICTION ACETAL RESIN

TOP PLATE THICKNESS 4,8mm

p.182 p.212 p.106 p.228 p.232

- Plates in self-lubricating low friction acetal resin, light brown-coloured.
- Pins in special stainless steel, 400 series, work hardened, magnetic, highly wear resistant.

PRODUCT CODE	INTERNAL CODE	CHARACTERISTICS						
	REDUCED PLATE GAP (*)	L (mm)	S (mm)	R (mm)	GC st. (mm)	GC sid. (mm)	Work. Load Max N (21°C)	Weight kg/m
LFA 879 M K325 (*)	6.16.040	82.5	4.8	500	44	44	2100	1.08
LFA 879 M K450	6.16.080	114.3	4.8	457	44	44	2100	1.24

- Standard shipping lengths = 80 pitches = 10 feet = 3,048 metres.

thermoplastic sideflexing chains

882 TAB SERIES

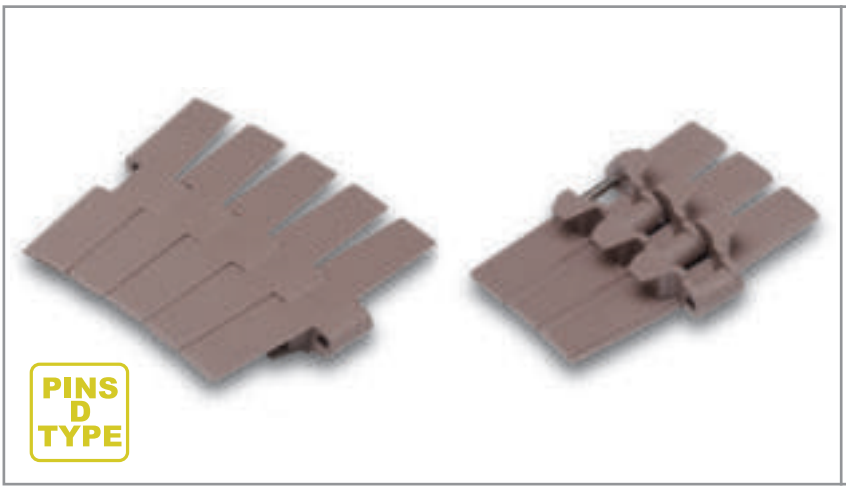

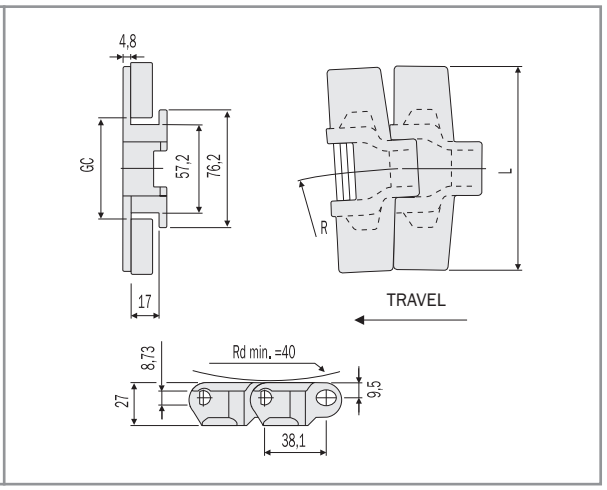

LFA 882 TAB - LOW FRICTION ACETAL RESIN

p.188 p.212 p.222 p.228 p.232

- Plates in self-lubricating low friction acetal resin, light brown-coloured.
- Pins in special chrome-nickel stainless steel, work hardened for high resistance.

PRODUCT CODE	INTERNAL CODE	CHARACTERISTICS					
		Width L (mm)	Radius R (mm)	GC st. (mm)	GC sid. (mm)	Working Load Max N (21°C)	Weight kg/m
LFA 882 TAB K450	6.15.081	114.3	610	60	58	3830	1.98
LFA 882 TAB K750	6.15.111	190.5	610	60	58	3830	2.43
LFA 882 TAB K1000	6.15.121	254.0	610	60	58	3830	2.87
LFA 882 TAB K1200	6.15.131	304.8	610	60	58	3830	3.41

SP 882 TAB - SUPER PERFORMANCE ACETAL RESIN

p.188 p.212 p.222 p.228 p.232

- Plates in self-lubricating very low friction acetal resin, dark grey-coloured.
- Pins in special chrome-nickel stainless steel, work hardened for high resistance.

PRODUCT CODE	INTERNAL CODE	CHARACTERISTICS					
		Width L (mm)	Radius R (mm)	GC st. (mm)	GC sid. (mm)	Working Load Max N (21°C)	Weight kg/m
SP 882 TAB K450	6.25.081	114.3	610	60	58	3830	1.98
SP 882 TAB K750	6.25.111	190.5	610	60	58	3830	2.43
SP 882 TAB K1000	6.25.121	254.0	610	60	58	3830	2.87
SP 882 TAB K1200	6.25.131	304.8	610	60	58	3830	3.41

PPB 882 TAB - CHEMICAL RESIST. REINFORCED POLYPROPYLENE

p.188 p.212 p.222 p.228 p.232

- Plates in chemical resistant reinforced polypropylene, white-coloured.
- Pins in chrome-nickel austenitic stainless steel (18% Chrome – 8% Nickel), work hardened for high resistance.

PRODUCT CODE	INTERNAL CODE	CHARACTERISTICS					
		Width L (mm)	Radius R (mm)	GC st. (mm)	GC sid. (mm)	Working Load Max N (21°C)	Weight kg/m
PPB 882 TAB K750*	6.45.111	190.5	610	60	58	3830	2.43
PPB 882 TAB K1000*	6.45.121	254.0	610	60	58	3830	2.87
PPB 882 TAB K1200*	6.45.131	304.8	650	60	58	3830	3.41

- Standard shipping lengths = 80 pitches = 10 feet = 3,048 metres.
- These chains can be supplied either with pins in austenitic stainless steel, work hardened, highly wear resistant, or with pins in thermoplastic resin.
* Size produced only upon request. Delivery conditions and terms to be agreed. These chains can be supplied either with pins in austenitic stainless steel, 316 series, work hardened, highly wear resistant, or with pins in reinforced polypropylene. (FOR PPB 882 TAB)
- PPB chains dimensions are larger than those indicated in the drawing. To know dimensions refer to our Technical Department.

916 926 286 · info@adeptrans.es

thermoplastic sideflexing chains

882 BEVEL SERIES



PINS D TYPE

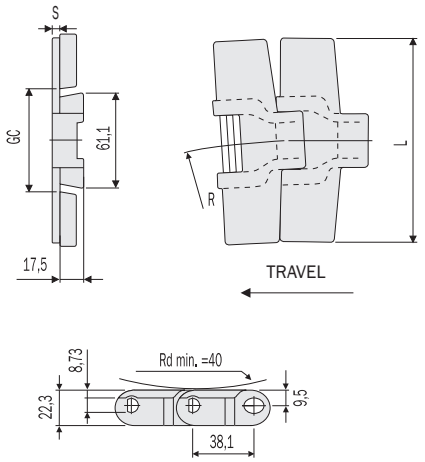

LFA 882 - LOW FRICTION ACETAL RESIN

p.188 p.212 p.223 p.229 p.232

- Plates in self-lubricating low friction acetal resin, light brown-coloured.
- Pins in special chrome-nickel stainless steel, work hardened for high resistance.

PRODUCT CODE	INTERNAL CODE	CHARACTERISTICS						
		Width L (mm)	S (mm)	R (mm)	GC st. (mm)	GC sid. (mm)	Work. Load Max N (21°C)	Weight kg/m
LFA 882 K450	6.15.080	114.3	4.8	610	61,9	58	3830	1.94
LFA 882 K750	6.15.110	190.5	4.8	610	61,9	58	3830	2.38
LFA 882 K1000	6.15.120	254.0	4.8	610	61,9	58	3830	2.83
LFA 882 K1200	6.15.130	304.8	4.8	610	61,9	58	3830	2.75

- Standard shipping lengths = 80 pitches = 10 feet = 3,048 metres.
- These chains can be supplied either with pins in austenitic stainless steel, work hardened, highly wear resistant, or with pins in thermoplastic resin.

thermoplastic sideflexing chains

ON MAGNETIC TRACKS - 882 M SERIES



PINS D TYPE

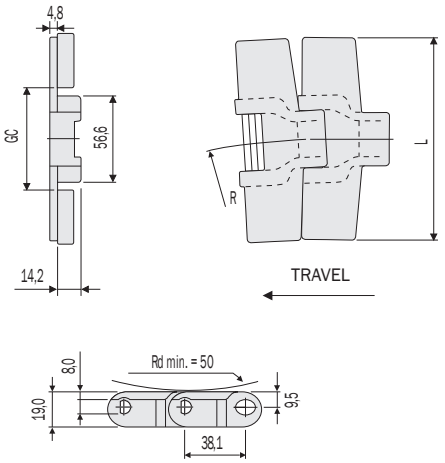

LFA 882 M - LOW FRICTION ACETAL RESIN

p.188 p.212 p.107 p.230 p.232

• Plates in self-lubricating low friction acetal resin, light brown-coloured.
• Pins in special stainless steel, 400 series, work hardened, magnetic, highly wear resistant.

PRODUCT CODE	INTERNAL CODE	CHARACTERISTICS				
		Width L (mm)	Radius R (mm)	GC (mm)	Working Load Max N (21°C)	Weight kg/m
LFA 882 M K750	6.18.175	190.5	610	60	3830	2.16
LFA 882 M K1000	6.18.185	254.0	610	60	3830	2.45
LFA 882 M K1200	6.18.195	304.8	610	60	3830	2.70

- Standard shipping lengths = 80 pitches = 10 feet = 3,048 metres.

SP 882 M - SUPER PERFORMANCE ACETAL RESIN

p.188 p.212 p.107 p.230 p.232

• Plates in self-lubricating very low friction acetal resin, dark grey-coloured.
• Pins in special stainless steel, 400 series, work hardened, magnetic, highly wear resistant.

PRODUCT CODE	INTERNAL CODE	CHARACTERISTICS				
		Width L (mm)	Radius R (mm)	GC (mm)	Working Load Max N (21°C)	Weight kg/m
SP 882 M K750	6.28.175	190.5	610	60	3830	2.16
SP 882 M K1000	6.28.185	254.0	610	60	3830	2.45
SP 882 M K1200	6.28.195	304.8	610	60	3830	2.70

- Standard shipping lengths = 80 pitches = 10 feet = 3,048 metres.

thermoplastic straight running chains

DOUBLE HINGE - LBP 821 SERIES

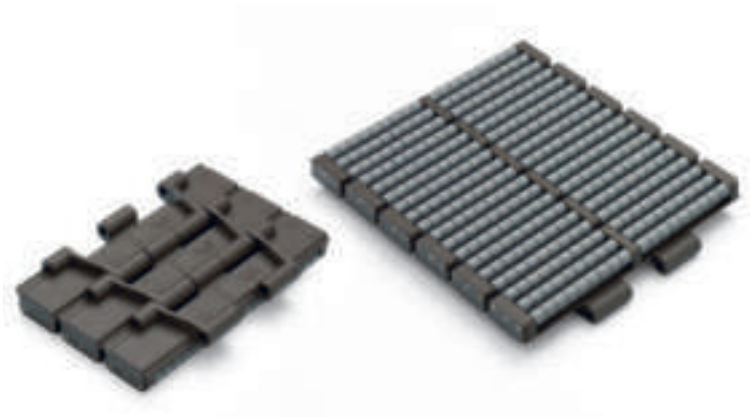

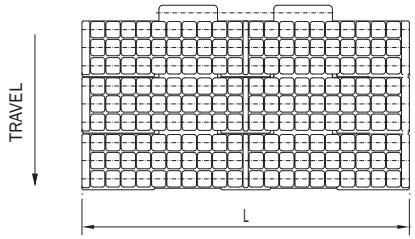

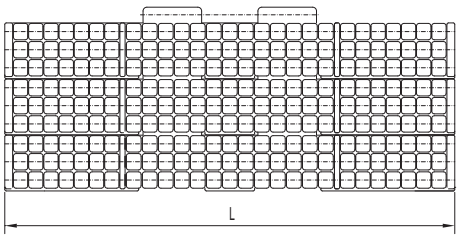

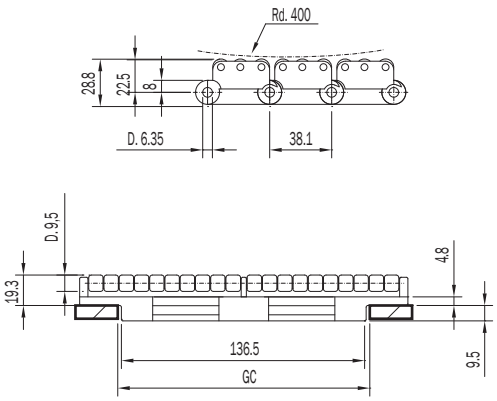

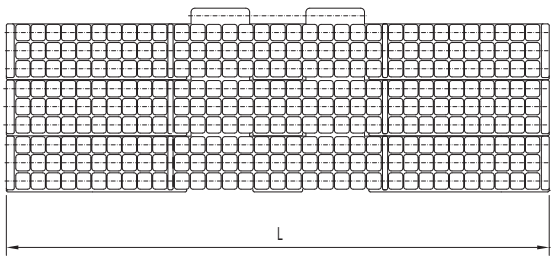

ADVANTAGES

- High breaking load.
- Rollers are made in special material for low friction and high wear resistance.
- Very low back-line pressure.
- Extremely quite running of the rollers.
- Pins rollers support of 5 mm diameter, plugged-in and locked at the ends.

LBP 821 - SUPER PERFORMANCE ACETAL RESIN

p.176 p.211 p.230 p.232

• Plates in self-lubricating very low friction acetal resin, dark grey-coloured.
• Rollers are made of special wear resistance acetal resin, light-grey coloured.
• Pins in special chrome-nickel stainless steel, work hardened for high resistance.

PRODUCT CODE	INTERNAL CODE	CHARACTERISTICS			
		Width L (mm)	GC (mm)	Working Load Max N (21°C)	Weight kg/m
LBP 821 K750	6.24.110LBP	190.5	140	2680	5.52
LBP 821 K1000	6.24.120LBP	254.0	140	2680	6.9
LBP 821 K1200	6.24.130LBP	304.8	140	2680	8.0

- Standard shipping lengths = 40 pitches = 5 feet = 1,524 metres.

thermoplastic straight running chains

SINGLE REINFORCED HINGE - LBP 8257 SERIES

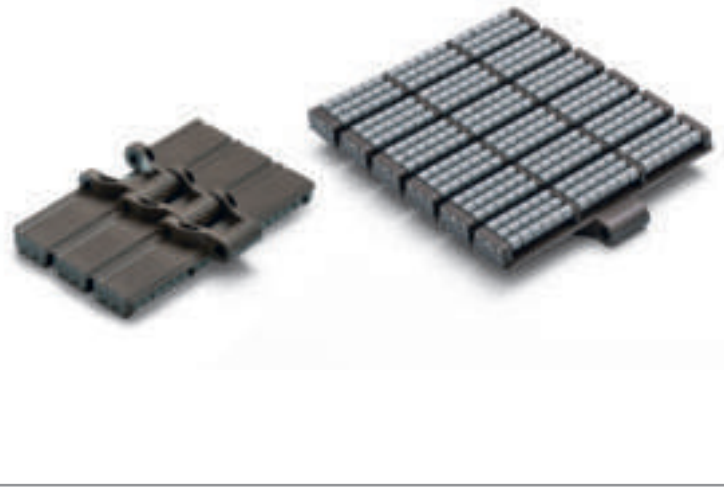

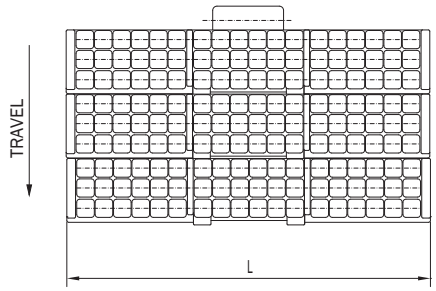

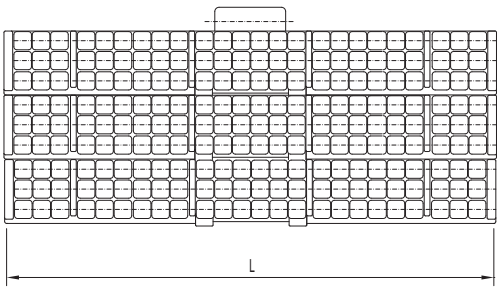

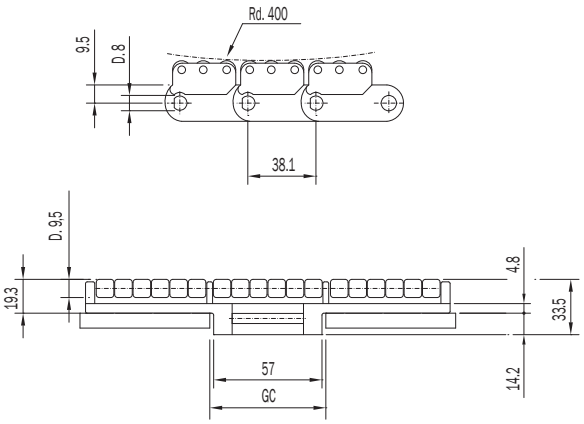

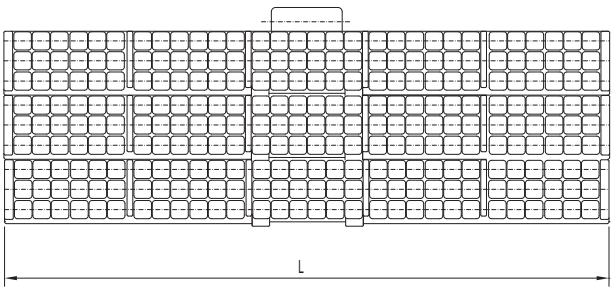

ADVANTAGES

- High breaking load.
- Rollers are made in special material for low friction and high wear resistance.
- Very low back-line pressure.
- Extremely quite running of the rollers.
- Pins rollers support of 5 mm diameter, plugged-in and locked at the ends.

LBP 8257 - SUPER PERFORMANCE ACETAL RESIN

p.188 p.230
p.212 p.232

• Plates in self-lubricating very low friction acetal resin, dark grey-coloured.
• Rollers are made of special wear resistance acetal resin, light-grey coloured.
• Pins in special stainless steel, 400 series, work hardened, magnetic, highly wear resistant.

PRODUCT CODE	INTERNAL CODE	CHARACTERISTICS			
		Width L (mm)	GC (mm)	Working Load Max N (21°C)	Weight kg/m
LBP 8257 K750	6.20.175LBP	190.5	60	3830	5.65
LBP 8257 K1000	6.20.185LBP	254.0	60	3830	7.2
LBP 8257 K1200	6.20.195LBP	304.8	60	3830	8.1

- Standard shipping lenghts = 40 pitches = 5 feet = 1,524 metres.

thermoplastic sideflexing chains

LBP 882 TAB SERIES

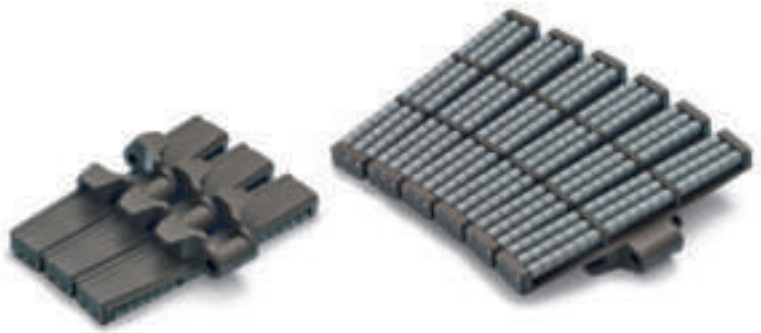

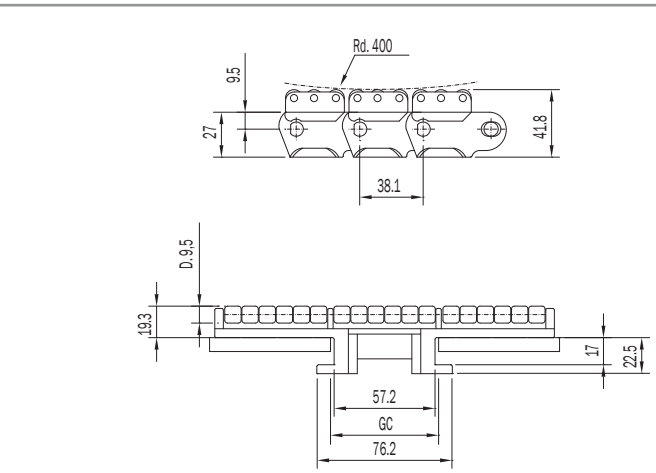

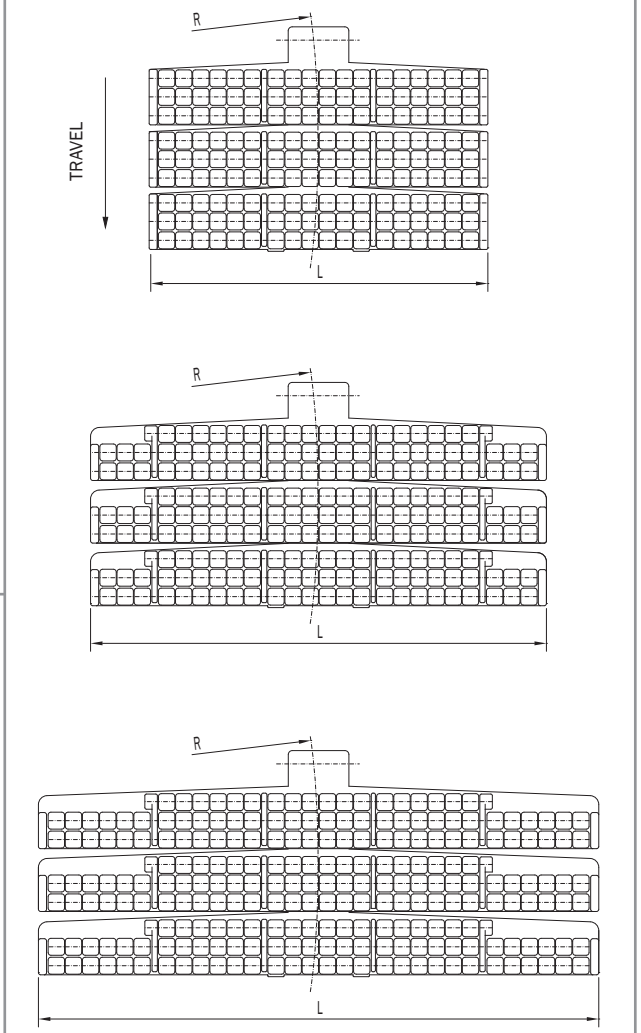

ADVANTAGES

- High breaking load.
- Rollers are made in special material for low friction and high wear resistance.
- Very low back-line pressure.
- Extremely quite running of the rollers.
- Pins rollers support of 5 mm diameter, plugged-in and locked at the ends.

LBP 882 TAB - SUPER PERFORMANCE ACETAL RESIN

p.188 p.212 p.222 p.230 p.232

• Plates in self-lubricating very low friction acetal resin, dark grey-coloured.
• Rollers are made of special wear resistance acetal resin, light-grey coloured.
• Pins in special chrome-nickel stainless steel, work hardened for high resistance.

PRODUCT CODE	INTERNAL CODE	CHARACTERISTICS				
		Width L (mm)	Radius R (mm)	GC (mm)	Working Load Max N (21°C)	Weight kg/m
LBP 882 TAB K750	6.25.111LBP	190.5	610	60	3830	4.7
LBP 882 TAB K1000	6.25.121LBP	254.0	610	60	3830	5.9
LBP 882 TAB K1200	6.25.131LBP	304.8	650	60	3830	6.5

- Standard shipping lenghts = 40 pitches = 5 feet = 1,524 metres.

thermoplastic sideflexing chains

ON MAGNETIC TRACKS - LBP 882 M SERIES



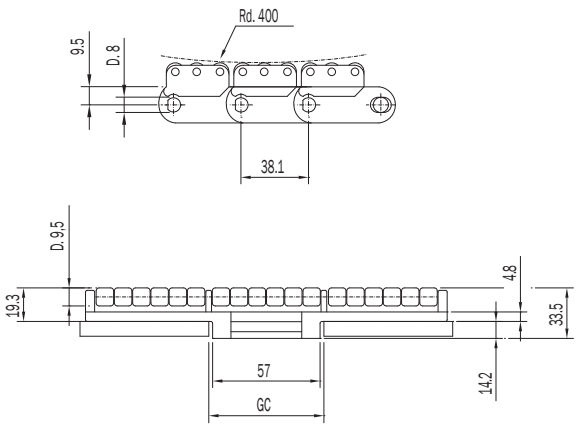

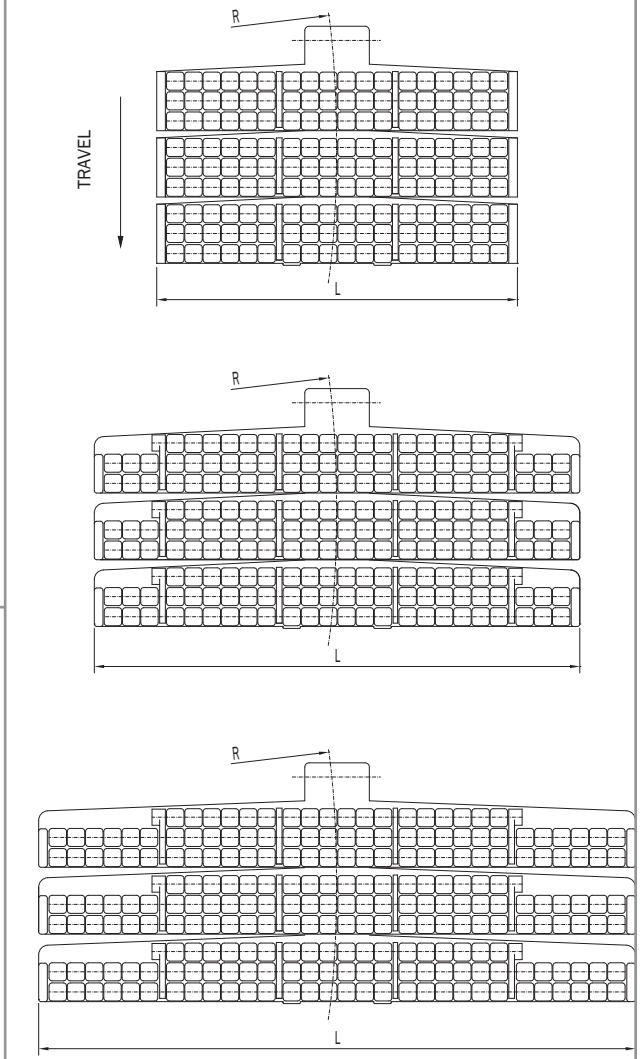

ADVANTAGES

- High breaking load.
- Rollers are made in special material for low friction and high wear resistance.
- Very low back-line pressure.
- Extremely quite running of the rollers.
- Pins rollers support of 5 mm diameter, plugged-in and locked at the ends.

LBP 882 M SERIES - SUPER PERFORMANCE ACETAL RESIN

p.188 p.212 p.107 p.230 p.232

• Plates in self-lubricating very low friction acetal resin, dark grey-coloured.
• Rollers are made of special wear resistance acetal resin, light-grey coloured.
• Pins in special stainless steel, 400 series, work hardened, magnetic, highly wear resistant.

PRODUCT CODE	INTERNAL CODE	CHARACTERISTICS				
		Width L (mm)	Radius R (mm)	GC (mm)	Working Load Max N (21°C)	Weight kg/m
LBP 882 M K750	6.28.175LBP	190.5	610	60	3830	3.90
LBP 882 M K1000	6.28.185LBP	254.0	610	60	3830	4.95
LBP 882 M K1200	6.28.195LBP	304.8	650	60	3830	5.85

- Standard shipping lenghts = 40 pitches = 5 feet = 1,524 metres.

vacuum thermoplastic straight runn. chains

820 VACUUM SERIES



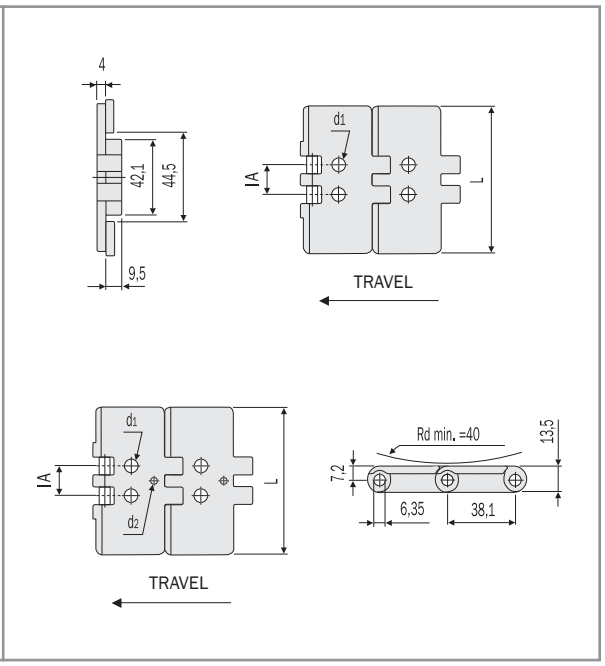

LFA 820 VACUUM - LOW FRICTION ACETAL RESIN

p.169 p.230
p.210 p.232

- Plates in self-lubricating low friction acetal resin, light brown-coloured, with 2 or 3 bores per link.
- Pins in special chrome-nickel stainless steel, work hardened for high resistance.

PRODUCT CODE	INTERNAL CODE	CHARACTERISTICS					
	B2 TWO BORES	Width L (mm)	Diam. bore d1 (mm)	Diam. bore d2 (mm)	IA* (mm)	Working Load Max N (21°C)	Weight kg/m
LFA 820 K325 B2	6.10.040.2	82.5	6.5	-	19	1230	0.83
LFA 820 K350 B2	6.10.060.2	88.9	4.0	-	45	1230	0.87
LFA 820 K450 B2 H30	6.10.080.2a	114.3	8.0	-	30	1230	1.03
LFA 820 K450 B2 H50	6.10.080.2b	114.3	8.0	-	50	1230	1.03
	B3 THREE BORES						
LFA 820 K325 B3	6.10.040.3	82.5	7.9	4.4	20	1230	0.83

* IA = Distance between centres.
- Standard shipping lengths = 80 pitches = 10 feet = 3,048 metres.
- These chains can be supplied either with pins in austenitic stainless steel, work hardened, highly wear resistant, or with pins in thermoplastic resin.

vacuum thermoplastic sideflexing chains

880 TAB VACUUM SERIES



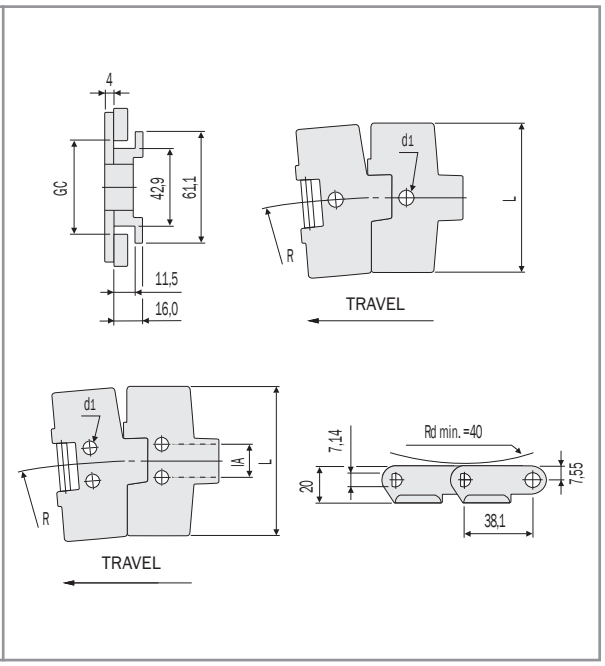

LFA 880 TAB VACUUM - LOW FRICTION ACETAL RESIN

p.182 p.212 p.218 p.230 p.232

- Plates in self-lubricating low friction acetal resin, light brown-coloured, with 1 or 2 bores per link.
- Pins in special chrome-nickel stainless steel, work hardened for high resistance.

PRODUCT CODE	INTERNAL CODE	CHARACTERISTICS							
	B1 ONE BORE	Width L (mm)	Diam. bore d1 (mm)	IA* (mm)	R (mm)	GC st. (mm)	GC sid. (mm)	Work. Load Max N (21°C)	Weight kg/m
LFA 880 TAB K325 B1...	6.12.041.1...	82.5	5 / 6 / 6.5 8 / 9.5 / 10	-	457	46	44.2	2100	0.94
	B2 TWO BORES								
LFA 880 TAB K325 B2...	6.12.041.2a	82.5	6.0	24	457	46	44.2	2100	0.94
	6.12.041.2b	82.5	8.0	20	457	46	44.2	2100	0.94
LFA 880 TAB K450 B2...	6.12.081.2a	114.3	6.0	24	610	46	44.2	2100	1.08

* IA = Distance between centres.
- Standard shipping lengths = 80 pitches = 10 feet = 3,048 metres.
- These chains can be supplied either with pins in austenitic stainless steel, work hardened, highly wear resistant, or with pins in thermoplastic resin.

straight running chains

WITH THERMOPLASTIC TOP PLATES - 843 SERIES



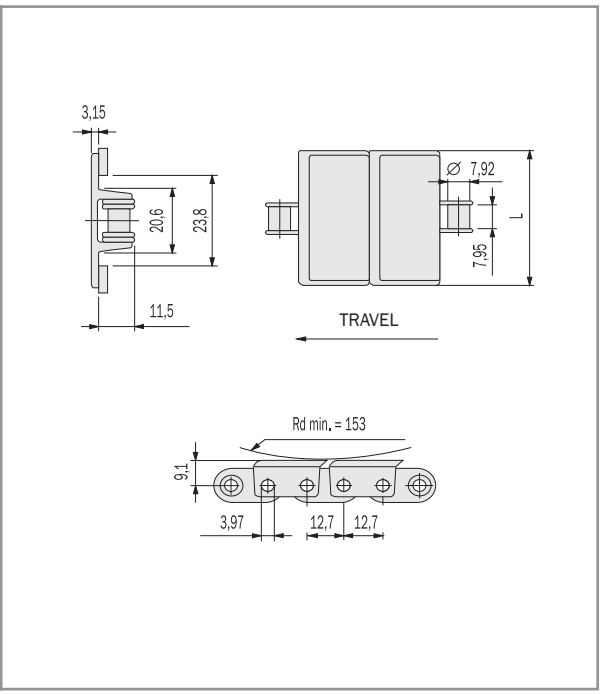

LFA 843 - LOW FRICTION ACETAL RESIN

p.214 p.232

- Plates in self-lubricating low friction acetal resin, light brown-coloured.
- Base roller chain, 12.7 mm - 1/2" pitch. - ANSI 43

PRODUCT CODE	INTERNAL CODE	CHARACTERISTICS			
		Base roller chain	Width L (mm)	Breaking Load N	Weight kg/m
LFA 843 K138	843.AC.138	steel	34.9	16900	0.83
LFA 843 K144	843.AC.144	steel	36.5	16900	0.84
LFA 843 K200	843.AC.010	steel	50.8	16900	0.89
LFA 843 K250	843.AC.020	steel	63.5	16900	0.92
LFA 843 K275*	843.AC.200	steel	69.9	16900	0.94
LFA 843 K325	843.AC.040	steel	82.5	16900	1.03
LFA 843 SS K138	843.AS.138	stainless steel	34.9	10700	0.83
LFA 843 SS K144	843.AS.144	stainless steel	36.5	10700	0.84
LFA 843 SS K200	843.AS.010	stainless steel	50.8	10700	0.89
LFA 843 SS K250	843.AS.020	stainless steel	63.5	10700	0.92
LFA 843 SS K275*	843.AS.200	stainless steel	69.9	10700	0.94
LFA 843 SS K325	843.AS.040	stainless steel	82.5	10700	1.03

* Size produced only upon request. Delivery conditions and terms to be agreed.
- Standard shipping lengths = 240 pitches = 10 feet = 3,048 metres.

straight running chains

WITH THERMOPLASTIC TOP PLATES - 845 SERIES



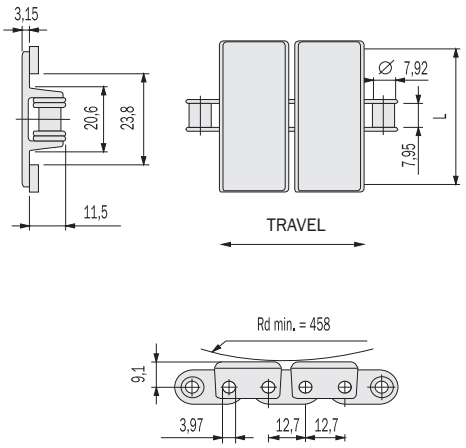

LFA 845 - LOW FRICTION ACETAL RESIN

p.214 p.232

- Plates in self-lubricating low friction acetal resin, light brown-coloured.
- Base roller chain, 12.7 mm - 1/2" pitch. - ANSI 43

PRODUCT CODE	INTERNAL CODE	CHARACTERISTICS			
		Base roller chain	Width L (mm)	Breaking Load N	Weight kg/m
LFA 845 K118*	845.AC.118	steel	28.6	16900	0.85
LFA 845 K138	845.AC.138	steel	34.9	16900	0.89
LFA 845 K200*	845.AC.010	steel	50.8	16900	0.99
LFA 845 SS K118*	845.AS.118	stainless steel	28.6	10700	0.85
LFA 845 SS K138*	845.AS.138	stainless steel	34.9	10700	0.89
LFA 845 SS K200*	845.AS.010	stainless steel	50.8	10700	0.99

* Size produced only upon request. Delivery conditions and terms to be agreed.
- Standard shipping lengths = 240 pitches = 10 feet = 3,048 metres.

straight running chains

WITH THERMOPLASTIC TOP PLATES - 863 SERIES



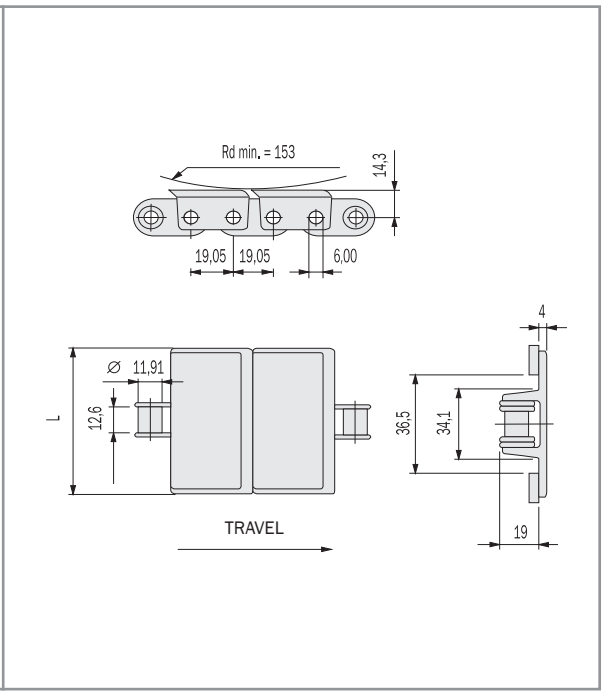

LFA 863 - LOW FRICTION ACETAL RESIN

p.214 p.232

- Plates in self-lubricating low friction acetal resin, light brown-coloured.
- Base roller chain, 19.05 mm - 3/4" pitch. - ANSI 63

PRODUCT CODE	INTERNAL CODE	CHARACTERISTICS			
		Base roller chain	Width L (mm)	Breaking Load N	Weight kg/m
LFA 863 K175*	863.AC.300	steel	44.5	37000	1.8
LFA 863 K225	863.AC.015	steel	57.1	37000	1.9
LFA 863 K250*	863.AC.020	steel	63.5	37000	2.0
LFA 863 K325	863.AC.040	steel	82.5	37000	2.1
LFA 863 K450	863.AC.080	steel	114.3	37000	2.3
LFA 863 K600	863.AC.100	steel	152.4	37000	2.5
LFA 863 K750	863.AC.110	steel	190.5	37000	2.7
LFA 863 SS K175*	863.AS.300	stainless steel	44.5	26000	1.8
FA 863 SS K225	863.AS.015	stainless steel	57.1	26000	1.9
LFA 863 SS K250*	863.AS.020	stainless steel	63.5	26000	2.0
LFA 863 SS K325	863.AS.040	stainless steel	82.5	26000	2.1
LFA 863 SS K450	863.AS.080	stainless steel	114.3	26000	2.3
LFA 863 SS K600	863.AS.100	stainless steel	152.4	26000	2.5
LFA 863 SS K750	863.AS.110	stainless steel	190.5	26000	2.7

* Size produced only upon request. Delivery conditions and terms to be agreed.
- Standard shipping lengths = 160 pitches = 10 feet = 3,048 metres.

straight running chains

WITH THERMOPLASTIC TOP PLATES - 863 TAB SERIES



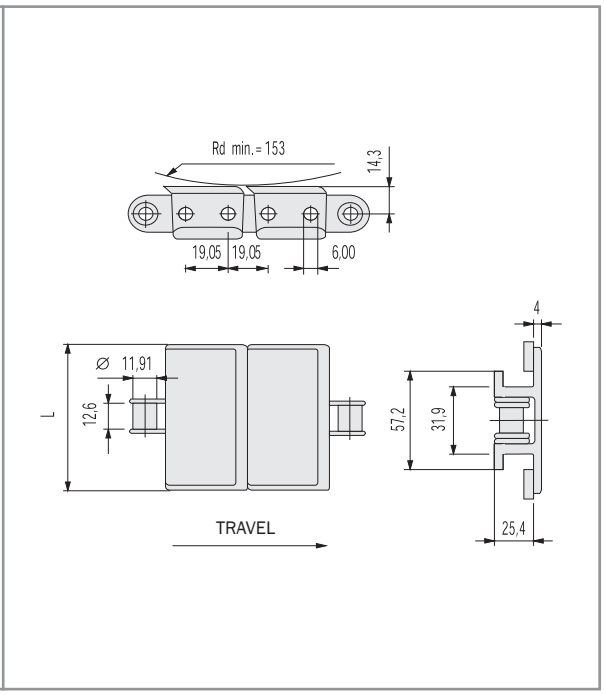

LFA 863 TAB - LOW FRICTION ACETAL RESIN

p.214 p.232

• Plates in self-lubricating low friction acetal resin, light brown-coloured.
• Base roller chain, 19.05 mm - 3/4" pitch. - ANSI 63 SB

PRODUCT CODE	INTERNAL CODE	CHARACTERISTICS			
		Base roller chain	Width L (mm)	Breaking Load N	Weight kg/m
LFA 863 TAB K250	863.AC.021	steel	63.5	27000	2.10
LFA 863 TAB K325	863.AC.041	steel	82.5	27000	2.20
LFA 863 TAB K450	863.AC.081	steel	114.3	27000	2.40
LFA 863 TAB K600	863.AC.101	steel	152.4	27000	2.60
LFA 863 TAB K1000	863.AC.121	steel	254.0	27000	3.10
LFA 863 TAB SS K250	863.AS.021	stainless steel	63.5	21000	2.10
LFA 863 TAB SS K325	863.AS.041	stainless steel	82.5	21000	2.20
LFA 863 TAB SS K450	863.AS.081	stainless steel	114.3	21000	2.40
LFA 863 TAB SS K600	863.AS.101	stainless steel	152.4	21000	2.60
LFA 863 TAB SS K1000	863.AS.121	stainless steel	254.0	21000	3.10

- Standard shipping lengths = 160 pitches = 10 feet = 3,048 metres.

straight running chains

WITH THERMOPLASTIC TOP PLATES - 963 SERIES



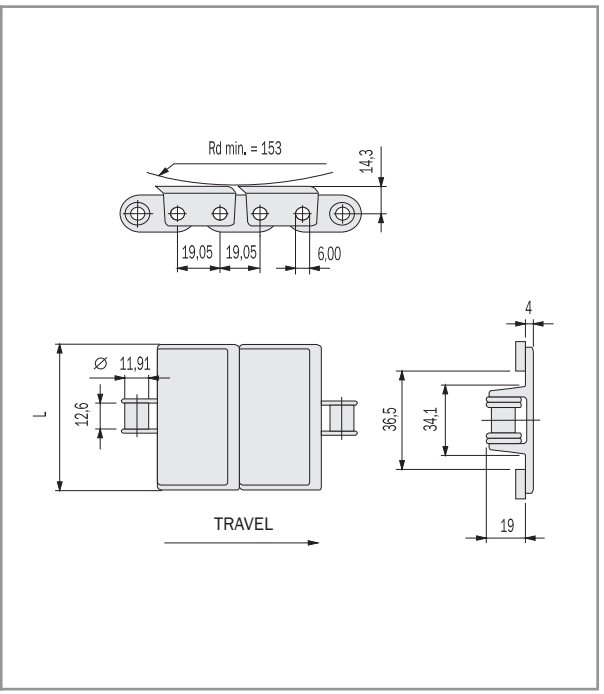

LFA 963 - LOW FRICTION ACETAL RESIN

p.214 p.232

- Plates in self-lubricating low friction acetal resin, light brown-coloured.
- Base roller chain, 19.05 mm - 3/4" pitch. - ANSI 63

PRODUCT CODE	INTERNAL CODE	CHARACTERISTICS			
		Base roller chain	Width L (mm)	Breaking Load N	Weight kg/m
LFA 963 K325	963.AC.040	steel	82.5	37000	2.10
LFA 963 K450	963.AC.080	steel	114.3	37000	2.23
LFA 963 K600	963.AC.100	steel	152.4	37000	2.53
LFA 963 K750	963.AC.110	steel	190.5	37000	2.68
LFA 963 SS K325	963.AS.040	stainless steel	82.5	26000	2.10
LFA 963 SS K450	963.AS.080	stainless steel	114.3	26000	2.23
LFA 963 SS K600	963.AS.100	stainless steel	152.4	26000	2.53
LFA 963 SS K750	963.AS.110	stainless steel	190.5	26000	2.68

- Standard shipping lengths = 160 pitches = 10 feet = 3,048 metres.

sideflexing chains

WITH THERMOPLASTIC TOP PLATES - 1843 TAB SERIES



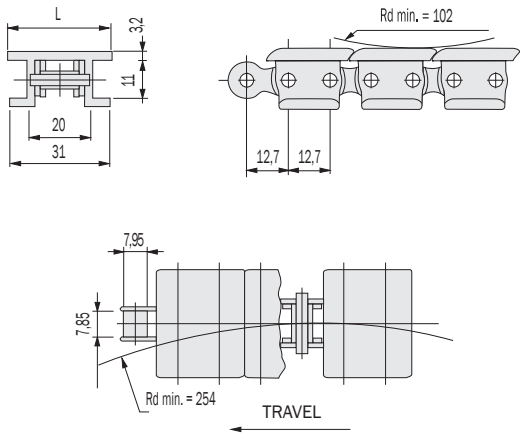

LFA 1843 TAB - LOW FRICTION ACETAL RESIN

p.214 p.226 p.228

• Plates in self-lubricating low friction acetal resin, light brown-coloured.
• Base roller chain, 12.7 mm - 1/2" pitch. - ANSI 43 SB

PRODUCT CODE	INTERNAL CODE	CHARACTERISTICS			
		Base roller chain	Width L (mm)	Breaking Load N	Weight kg/m
LFA 1843 TAB K125	1843.AC.280	steel	31.8	13000	0.74
LFA 1843 TAB K200	1843.AC.010	steel	50.8	13000	0.89
LFA 1843 TAB K325	1843.AC.041	steel	82.5	13000	1.03
LFA 1843 TAB SS K125	1843.AS.280	stainless steel	31.8	10000	0.74
LFA 1843 TAB SS K200	1843.AS.010	stainless steel	50.8	10000	0.89
LFA 1843 TAB SS K325	1843.AS.041	stainless steel	82.5	10000	1.03

- Standard shipping lengths = 240 pitches = 10 feet = 3,048 metres.

sideflexing chains

WITH THERMOPLASTIC TOP PLATES - 1863 TAB SERIES



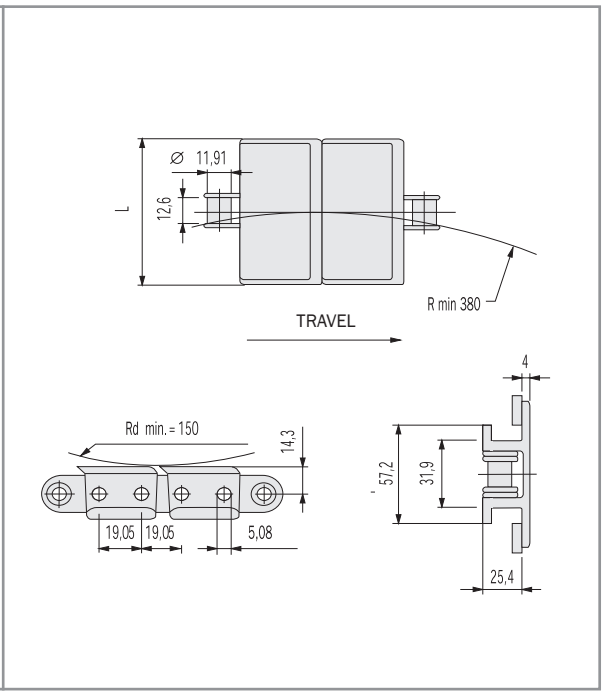

LFA 1863 TAB - LOW FRICTION ACETAL RESIN

p.214 p.225 p.228

• Plates in self-lubricating low friction acetal resin, light brown-coloured.
• Base roller chain, 19.05 mm - 3/4" pitch. - ANSI 63 SB

PRODUCT CODE	INTERNAL CODE	CHARACTERISTICS			
		Base roller chain	Width L (mm)	Breaking Load N	Weight kg/m
LFA 1863 TAB K225	1863.AC.016	steel	57.1	27000	2.00
LFA 1863 TAB SS K225	1863.AS.016	stainless steel	57.1	21000	2.00

- Standard shipping lengths = 160 pitches = 10 feet = 3,048 metres.

sideflexing chains

WITH THERMOPLASTIC TOP PLATES - 1873 TAB SERIES

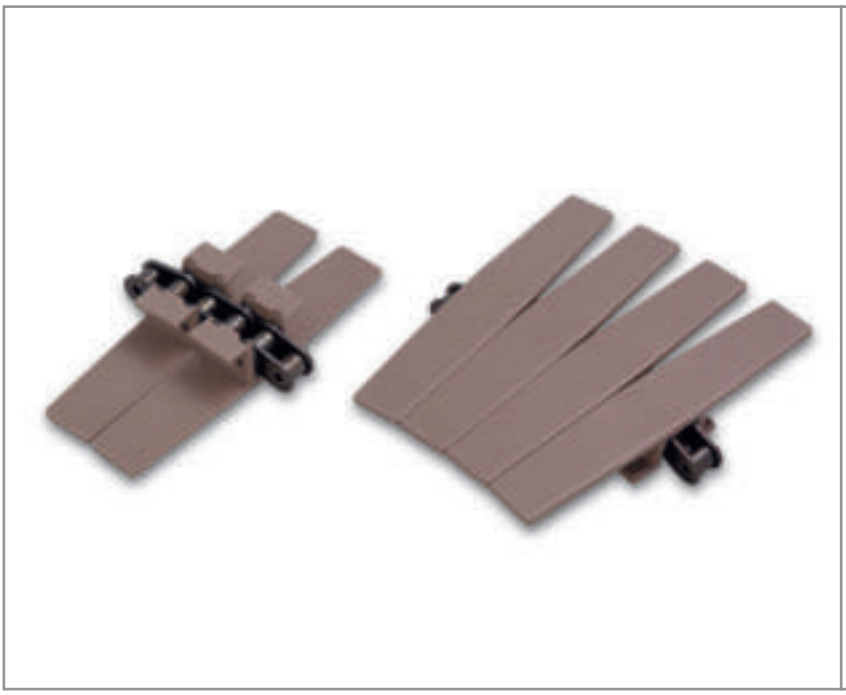

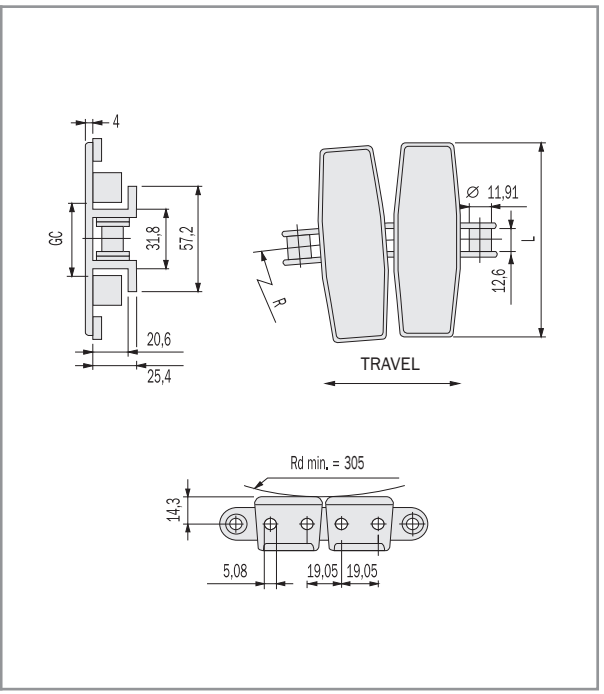

LFA 1873 TAB - LOW FRICTION ACETAL RESIN

p.214 p.225 p.228

- Plates in self-lubricating low friction acetal resin, light brown-coloured.
- Base roller chain, 19.05 mm - 3/4" pitch. - ANSI 63 SB

PRODUCT CODE	INTERNAL CODE	CHARACTERISTICS						
		Base roller chain	Width L (mm)	Radius R (mm)	GC st. (mm)	GC sid. (mm)	Breaking Load N	Weight kg/m
LFA 1873 TAB K325	1873.AC.041	steel	82.5	356	33.3	34.6	27000	2.10
LFA 1873 TAB K450	1873.AC.081	steel	114.3	356	33.3	34.6	27000	2.30
LFA 1873 TAB K600	1873.AC.101	steel	152.4	457	33.3	34.6	27000	2.40
LFA 1873 TAB K750	1873.AC.111	steel	190.5	457	33.3	34.6	27000	2.60
LFA 1873 TAB K1000	1873.AC.121	steel	254.0	457	33.3	34.6	27000	2.80
LFA 1873 TAB K1200	1873.AC.131	steel	304.8	610	33.3	34.6	27000	3.00
LFA 1873 TAB SS K325	1873.AS.041	stainless steel	82.5	356	33.3	34.6	21000	2.10
LFA 1873 TAB SS K450	1873.AS.081	stainless steel	114.3	356	33.3	34.6	21000	2.30
LFA 1873 TAB SS K600	1873.AS.101	stainless steel	152.4	457	33.3	34.6	21000	2.40
LFA 1873 TAB SS K750	1873.AS.111	stainless steel	190.5	457	33.3	34.6	21000	2.60
LFA 1873 TAB SS K1000	1873.AS.121	stainless steel	254.0	457	33.3	34.6	21000	2.80
LFA 1873 TAB SS K1200	1873.AS.131	stainless steel	304.8	610	33.3	34.6	21000	3.00

- Standard shipping lengths = 160 pitches = 10 feet = 3,048 metres.

thermoplastic straight running chains

WITH RUBBER INSERTS - SINGLE HINGE - HFL 820 SERIES

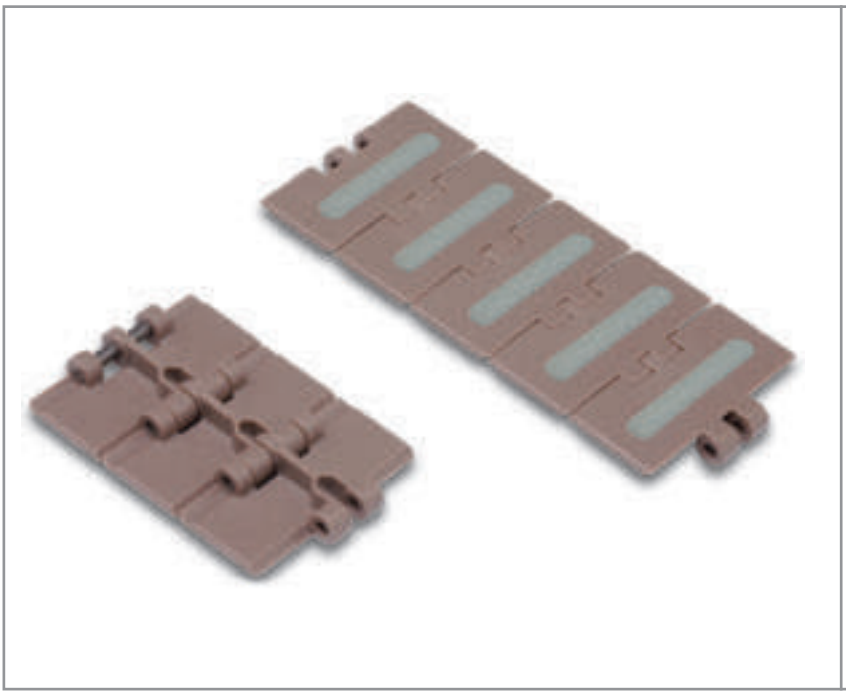

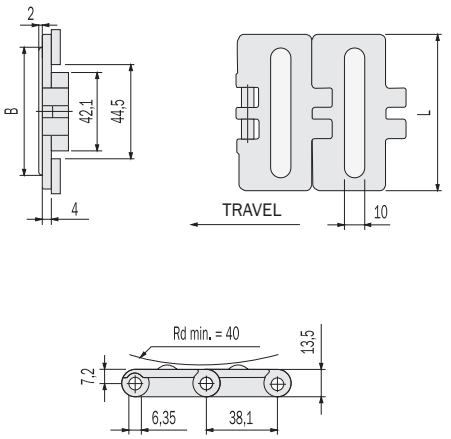

HFL 820 - HIGH FRICTION LINK

p.169 p.210 p.230 p.232

- Plates in self-lubricating acetal resin, light brown-coloured, with a rubber insert.
- Pins in special chrome-nickel stainless steel, work hardened for high resistance.

PRODUCT CODE	INTERNAL CODE	CHARACTERISTICS			
		Width L (mm)	B (mm)	Working Load Max N (21°C)	Weight kg/m
HFL 820 K325*	G.6.10.040	82.5	65.0	1230	0.83
HFL 820 K350*	G.6.10.060	88.9	88.9	1230	0.87
HFL 820 K400*	G.6.10.070	101.6	101.6	1230	0.95
HFL 820 K450*	G.6.10.080	114.3	114.3	1230	1.03
HFL 820 K600*	G.6.10.100	152.4	135.0	1230	1.25

- Inserts: rubber 60 shore A (grey).
* Size produced only upon request. Delivery conditions and terms to be agreed.
- Standard shipping lengths = 80 pitches = 10 feet = 3,048 metres.
- Special configurations of distance between inserts are available upon request.
  Delivery conditions and terms to be agreed.
- These chains can be supplied either with pins in austenitic stainless steel, work hardened, highly wear resistant, or with pins in thermoplastic resin.

thermoplastic straight running chains

WITH RUBBER INSERTS - DOUBLE HINGE - HFL 821 SERIES

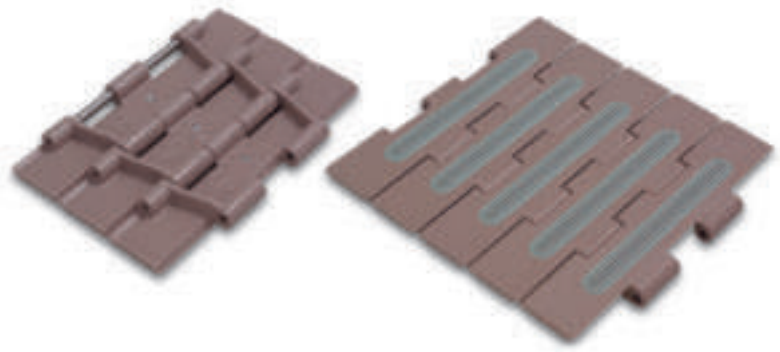

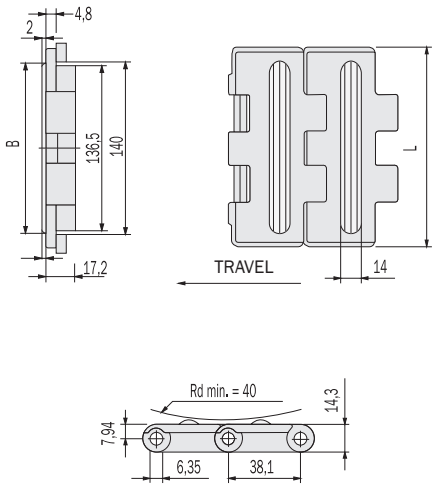

HFL 821 - HIGH FRICTION LINK

p.176 p.211 p.230 p.232

- Plates in self-lubricating acetal resin, light brown-coloured, with a rubber insert.
- Pins in special chrome-nickel stainless steel, work hardened for high resistance.

PRODUCT CODE	INTERNAL CODE	CHARACTERISTICS			
		Width L (mm)	B (mm)	Working Load Max N (21°C)	Weight kg/m
HFL 821 K750*	G.6.14.110	190.5	132.0	2680	2.50
HFL 821 K1000*	G.6.14.120	254.0	195.0	2680	2.95
HFL 821 K1200*	G.6.14.130	304.8	245.0	2680	3.25

- Inserts: rubber 60 shore A (grey).
* Size produced only upon request. Delivery conditions and terms to be agreed.
- Standard shipping lengths = 80 pitches = 10 feet = 3,048 metres.
- Special configurations of distance between inserts are available upon request.
  Delivery conditions and terms to be agreed.
- These chains can be supplied with pins in austenitic stainless steel, work hardened, highly wear resistant.

thermoplastic sideflexing chains

WITH RUBBER INSERTS - HFL 880 TAB SERIES

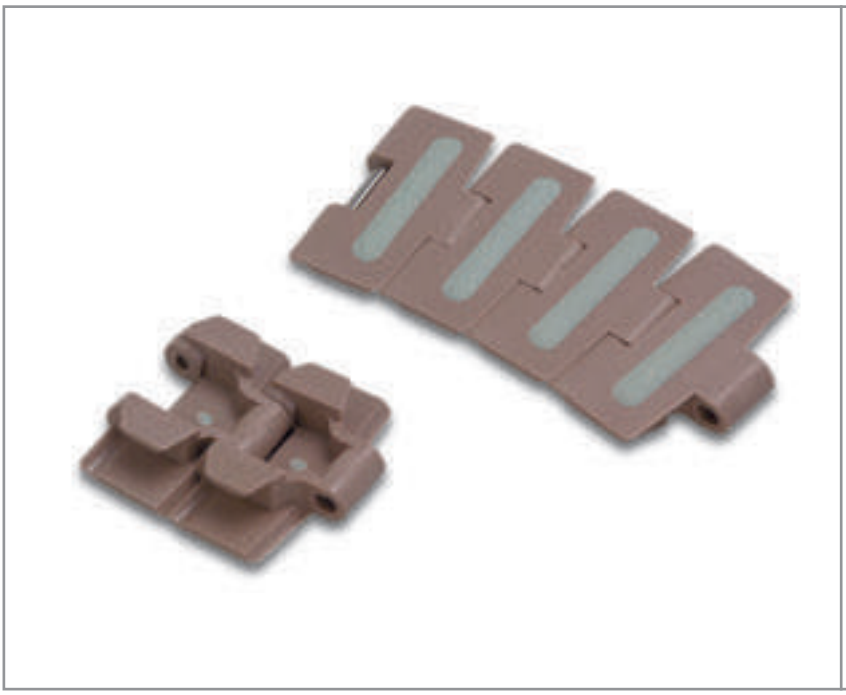

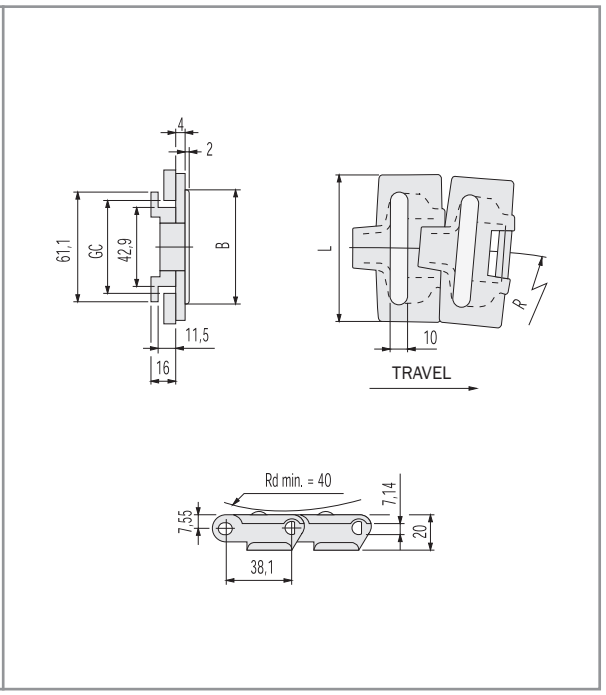

HFL 880 TAB - HIGH FRICTION LINK

p.182 p.212 p.218 p.228 p.232

- Plates in self-lubricating acetal resin, light brown coloured, with a rubber insert.
- Pins in special chrome-nickel stainless steel, work hardened for high resistance.

PRODUCT CODE	INTERNAL CODE	CHARACTERISTICS						
		Width L (mm)	B (mm)	R (mm)	GC st. (mm)	GC sid. (mm)	Work. Load Max N (21°C)	Weight kg/m
HFL 880 TAB K325*	G.6.12.041	82.5	65.0	400	46	44.2	2100	0.94
HFL 880 TAB K450*	G.6.12.081	114.3	95.0	400	46	44.2	2100	1.08

- Inserts: rubber 60 shore A (grey).
* Size produced only upon request. Delivery conditions and terms to be agreed.
- Standard shipping lengths = 80 pitches = 10 feet = 3,048 metres.
- Special configurations of distance between inserts are available upon request.
  Delivery conditions and terms to be agreed.
- These chains can be supplied either with pins in austenitic stainless steel, work hardened, highly wear resistant, or with pins in thermoplastic resin.

thermoplastic sideflexing chains

WITH RUBBER INSERTS - HFL 880 BO SERIES



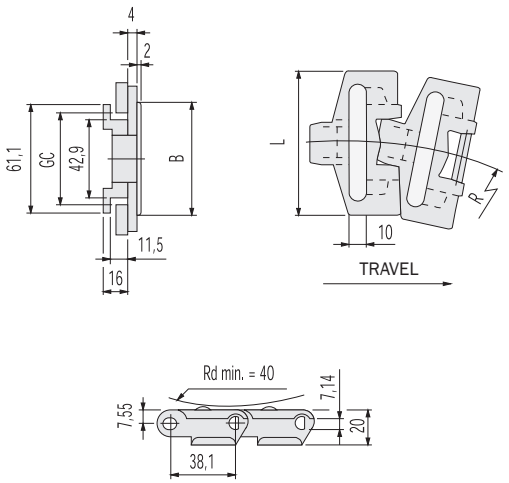

HFL 880 BO - HIGH FRICTION LINK

p.182 p.208 p.212 p.218 p.228 p.232

- Plates in self-lubricating acetal resin, light brown-coloured, with a rubber insert.
- Pins in special chrome-nickel stainless steel, work hardened for high resistance.

PRODUCT CODE	INTERNAL CODE	CHARACTERISTICS						
		Width L (mm)	B (mm)	R (mm)	GC st. (mm)	GC sid. (mm)	Work. Load Max N (21°C)	Weight kg/m
HFL 880 BO K325*	G.6.19.040	82.5	65.0	190	46	44.2	1680	0.96

- Inserts: rubber 60 shore A (grey).
* Size produced only upon request. Delivery conditions and terms to be agreed.
- Standard shipping lengths = 80 pitches = 10 feet = 3,048 metres.
- Special configurations of distance between inserts are available upon request.
  Delivery conditions and terms to be agreed.
- These chains can be supplied either with pins in austenitic stainless steel, work hardened, highly wear resistant, or with pins in thermoplastic resin.

thermoplastic sideflexing chains

WITH RUBBER INSERTS - HFL 878 BO SERIES



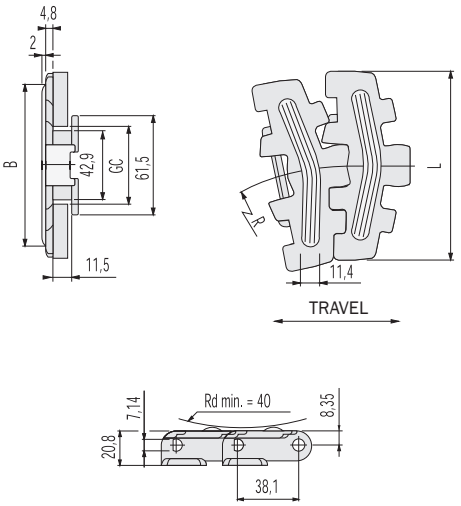

HFL 878 BO - HIGH FRICTION LINK

• Plates in self-lubricating acetal resin, light brown-coloured, with a rubber insert.
• Pins in special chrome-nickel stainless steel, work hardened for high resistance.

p.182 p.208 p.212 | p.218 | p.228 p.232

PRODUCT CODE	INTERNAL CODE	CHARACTERISTICS						
		Width L (mm)	B (mm)	R (mm)	GC st. (mm)	GC sid. (mm)	Work. Load Max N (21°C)	Weight kg/m
HFL 878 BO K325*	G.6.17.041	82.5	71.0	190	46	44.2	2100	1.08
HFL 878 BO K450*	G.6.17.081	114.3	102.0	190	46	44.2	2100	1.20

- Inserts: rubber 60 shore A (grey).
* Size produced only upon request. Delivery conditions and terms to be agreed.
- Standard shipping lengths = 80 pitches = 10 feet = 3,048 metres.
- Special configurations of distance between inserts are available upon request.
Delivery conditions and terms to be agreed.
- These chains can be supplied either with pins in austenitic stainless steel, work hardened, highly wear resistant, or with pins in thermoplastic resin.

thermoplastic sideflexing chains

WITH RUBBER INSERTS - HFL 882 TAB SERIES



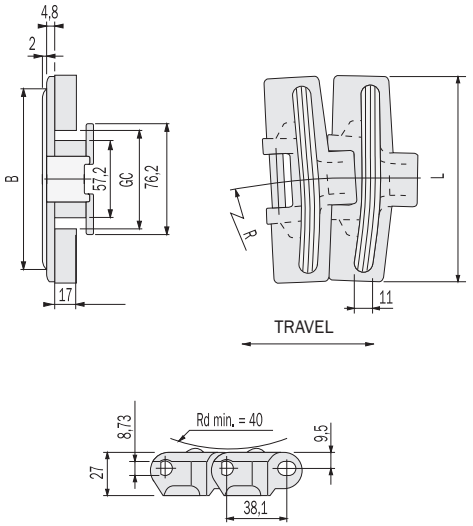

HFL 882 TAB - HIGH FRICTION LINK

p.182 p.212 p.222 p.228 p.232

- Plates in self-lubricating acetal resin, light brown-coloured, with a rubber insert.
- Pins in special chrome-nickel stainless steel, work hardened for high resistance.

PRODUCT CODE	INTERNAL CODE	CHARACTERISTICS						
		Width L (mm)	B (mm)	R (mm)	GC st. (mm)	GC sid. (mm)	Work. Load Max N (21°C)	Weight kg/m
HFL 882 TAB K750*	G.6.15.111	190.5	132.0	610	60	58	3830	2.43
HFL 882 TAB K1000*	G.6.15.121	254.0	195.0	610	60	58	3830	2.87
HFL 882 TAB K1200*	G.6.15.131	304.8	246.0	610	60	58	3830	3.41

- Inserts: rubber 60 shore A (grey).
* Size produced only upon request. Delivery conditions and terms to be agreed.
- Standard shipping lengths = 80 pitches = 10 feet = 3,048 metres.
- Special configurations of distance between inserts are available upon request.
  Delivery conditions and terms to be agreed.
- These chains can be supplied either with pins in austenitic stainless steel, work hardened, highly wear resistant, or with pins in thermoplastic resin.

sideflexing chains with thermoplastic

TOP PLATES AND RUBBER INSERTS - HFL 1873 TAB SERIES

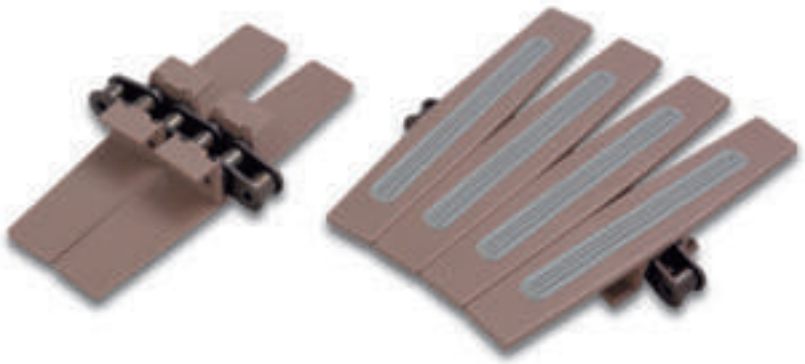

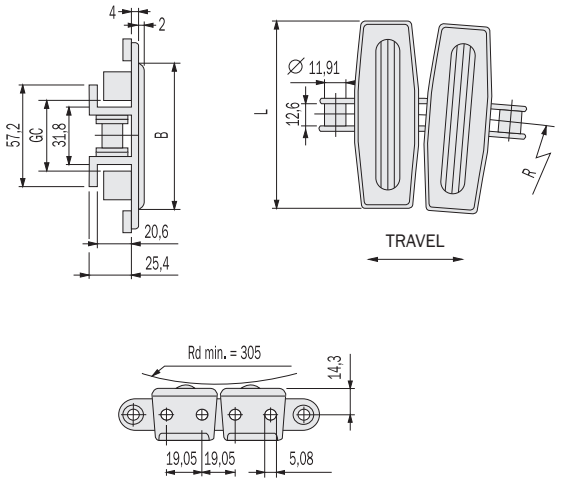

HFL 1873 TAB - HIGH FRICTION LINK

p.214 p.225 p.228

- Plates in self-lubricating acetal resin, light brown-coloured, with a rubber insert.
- Base roller chain, 19.05 mm - 3/4" pitch.

PRODUCT CODE	INTERNAL CODE	CHARACTERISTICS							
		Base roller chain	Width L (mm)	B (mm)	R (mm)	GC st. (mm)	GC sid. (mm)	Breaking Load N	Weight kg/m
HFL 1873 TAB K750	G.1873.AC.111	steel	190.5	132.0	457	33.3	34.6	27000	3.10
HFL 1873 TAB K1000	G.1873.AC.121	steel	254.0	195.0	457	33.3	34.6	27000	3.40
HFL 1873 TAB K1200	G.1873.AC.131	steel	304.8	245.0	457	33.3	34.6	27000	3.60
HFL 1873 TAB SS K750	G.1873.AS.111	stainless steel	190.5	132.0	457	33.3	34.6	21000	3.10
HFL 1873 TAB SS K1000	G.1873.AS.121	stainless steel	254.0	195.0	457	33.3	34.6	21000	3.40
HFL 1873 TAB SS K1200	G.1873.AS.131	stainless steel	304.8	245.0	457	33.3	34.6	21000	3.60

- Inserts: rubber 60 shore A (grey).
- Standard shipping lengths = 160 pitches = 10 feet = 3,048 metres.
- Special configurations of distance between inserts are available upon request.
  Delivery conditions and terms to be agreed.

sideflexing plastic gripper chains

1873 GS SERIES



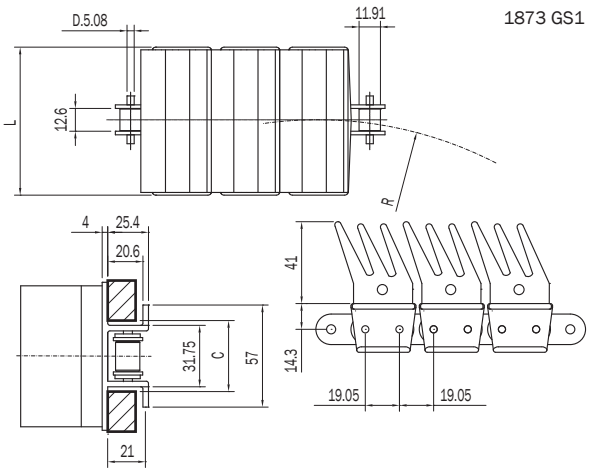



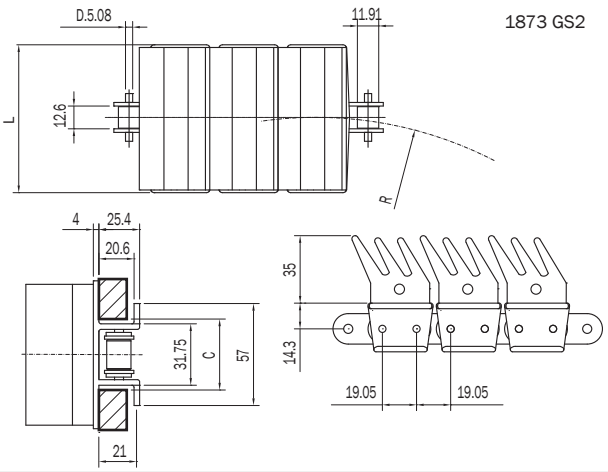

GS 1873 SERIES

p.214 p.225 p.228

Application: High speed conveyors, packaged products and conveying pet containers.
Benefits: High wear resistance, exceptional durability, extremely low noise performance, removable gripper.

- Plates in self-lubricating, very low friction acetal resin, dark grey-coloured.
- Gripper pads are made in NBR material
- Base roller chain, 19.05mm - 3/4" pitch ANSI 63 SB

PRODUCT CODE	INTERNAL CODE	CHARACTERISTICS					
		Base roller chain	Slat with (mm)	R (mm)	C (mm)	Ultimate strenght (N)	Weight kg/m
SP 1873 GS1 K325	1873.GS1.041	steel	82.5	380	35	27000	4.70
SP 1873 GS1 K450	1873.GS1.081	steel	114.3	380	35	27000	7.10
SP 1873 SS GS1 K325	1873.SGS1.041	stainless steel	82.5	380	35	21000	4.70
SP 1873 SS GS1 K450	1873.SGS1.081	stainless steel	114.3	380	35	21000	7.10
SP 1873 GS2 K325	1873.GS2.041	steel	82.5	380	35	27000	4.10
SP 1873 GS2 K450	1873.GS2.081	steel	114.3	380	35	27000	6.40
SP 1873 SS GS2 K325	1873.SGS2.041	stainless steel	82.5	380	35	21000	4.10
SP 1873 SS GS2 K450	1873.SGS2.081	stainless steel	114.3	380	35	21000	6.40

sideflexing gripper chains

1874 GV SERIES



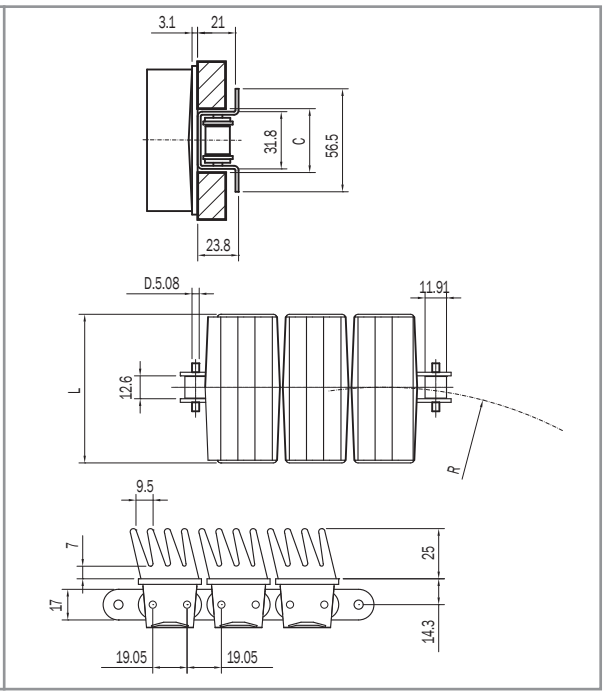

GV 1874 SERIES

p.214 p.225 p.228

Application: Conveying heavier containers, packaged products and conveying glass containers.
Benefits: High laceration and abrasion resistance, excellent resistance to fatigue and heat.

- Steel and stainless steel top plates
- Gripper pads are made in NBR o EPDM rubber
- Base roller chain, 19.05mm - 3/4" pitch ANSI 63 SB

PRODUCT CODE	INTERNAL CODE	CHARACTERISTICS					
		Rubber material	Slat with (mm)	R (mm)	C (mm)	Ultimate strenght (N)	Weight kg/m
GV 1874 K325	1874.CSG.041	NRB	82.5	380	35	27000	5.80
GV 1874 SS K325	1874.SSG.041	NRB	82.5	380	35	21000	5.80
GVH 1874 SS K325	1874.SSGH.041	EPDM	82.5	380	35	21000	5.80

NOTE OF MATERIALS
1874 - steel base roller chain, steel top plate
1874 SS - stainless steel base roller chain, stainless steel top plate

biplanar thermoplastic chains

1500 SERIES



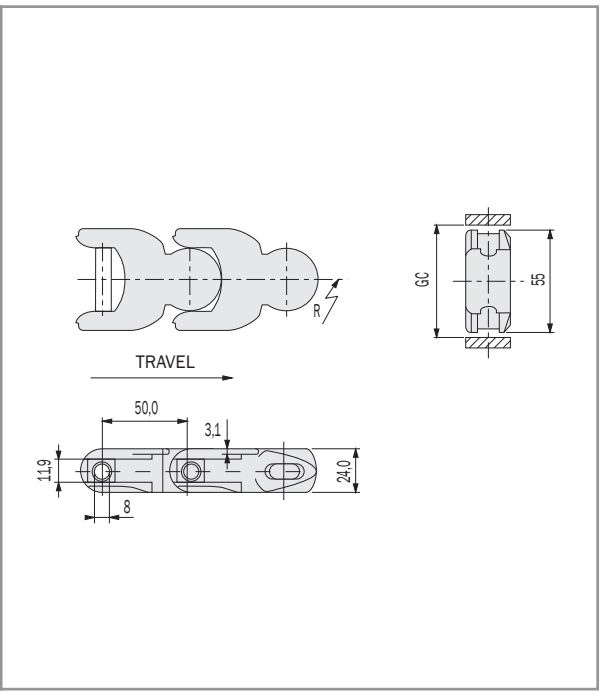

WLF 1500 - LOW FRICTION ACETAL RESIN

p.195 p.213 p.227 p.231

• Plates in self-lubricating, low friction acetal resin, white-coloured.
• Pins in austenitic chrome-nickel stainless steel, work hardened for high resistance.

PRODUCT CODE	INTERNAL CODE	CHARACTERISTICS				
		Radius R (mm)	GC st. (mm)	GC sid. (mm)	Working Load Max N (21°C)	Weight kg/m
WLF 1500	1500.WA	150	58	58	4000	1.37

- Standard shipping lengths = 122 pitches = 20 feet = 6,10 metres.

biplanar thermoplastic chains

1700 / 1700 TAB SERIES



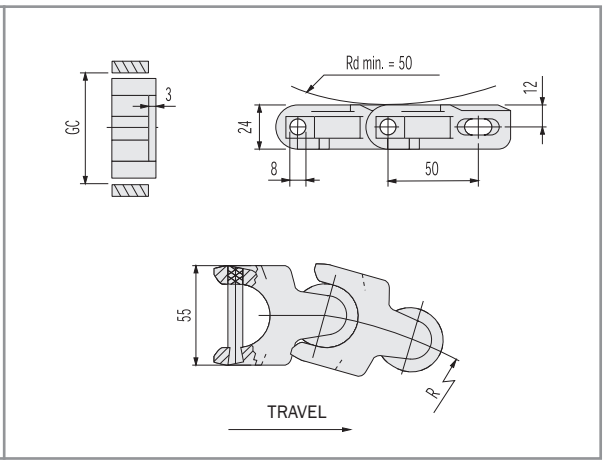

1700 - LOW FRICTION ACETAL RESIN

p.195 p.213 p.227 p.231

- Plates in self-lubricating low friction acetal resin
- Pins in austenitic chrome-nickel stainless steel, work hardened for high resistance.

PRODUCT CODE	INTERNAL CODE	CHARACTERISTICS				
	WHITE COLOUR	Radius R (mm)	GC st. (mm)	GC sid. (mm)	Working Load Max N (21°C)	Weight kg/m
WLF 1700	1700.WA	140	58	58	4000	1.26
	LIGHT BROWN COLOUR					
LFA 1700	1700.LFA	140	58	58	4000	1.26

- Standard shipping lengths = 122 pitches = 20 feet = 6,10 metres.



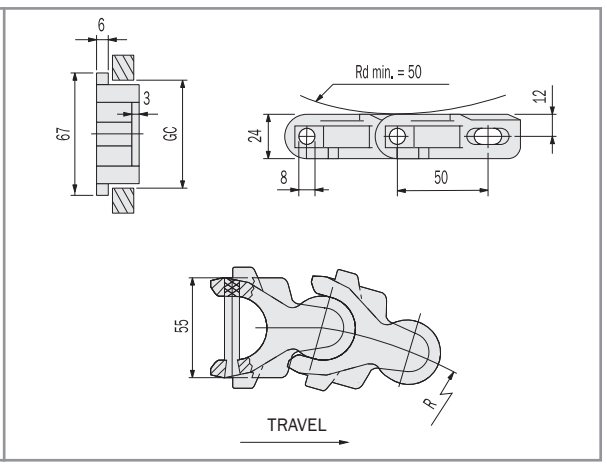

1700 TAB - LOW FRICTION ACETAL RESIN

p.195 p.213 p.227 p.231

- Plates in self-lubricating low friction acetal resin
- Pins in austentic chrome-nickel stainless steel, work hardened for high resistance.

PRODUCT CODE	INTERNAL CODE	CHARACTERISTICS				
	WHITE COLOUR	Radius R (mm)	GC st. (mm)	GC sid. (mm)	Working Load Max N (21°C)	Weight kg/m
WLF 1700 TAB	1700TAB.WA	140	58	58	4000	1.30
	LIGHT BROWN COLOUR					
LFA 1700 TAB	1700TAB.LFA	140	58	58	4000	1.30

- Standard shipping lengths = 122 pitches = 20 feet = 6,10 metres.

biplanar thermoplastic chains

1701 / 1701 TAB SERIES



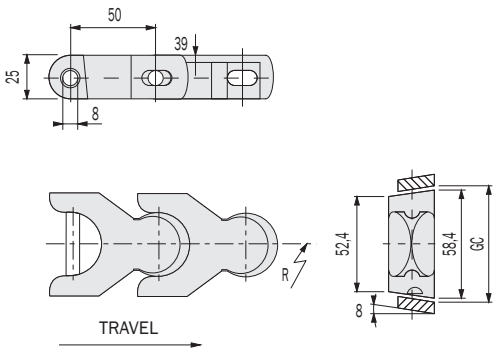

WLF 1701 - LOW FRICTION ACETAL RESIN

p.195
p.213
upon request

• Plates in self-lubricating low friction acetal resin, white coloured.
• Pins in austentic chrome-nickel stainless steel, work hardened for high resistance.

PRODUCT CODE	INTERNAL CODE	CHARACTERISTICS				
		Radius R (mm)	GC st. (mm)	GC sid. (mm)	Working Load Max N (21°C)	Weight kg/m
WLF 1701	1701.WA	150	62	60.3	4000	1.50

- Standard shipping lengths = 122 pitches = 20 feet = 6,10 metres.



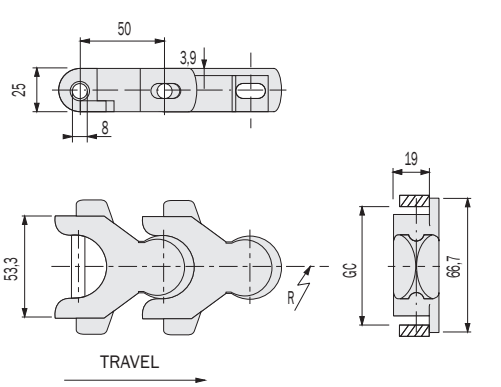

WLF 1701 TAB - LOW FRICTION ACETAL RESIN

p.195
p.213
p.227
p.231

• Plates in self-lubricating low friction acetal resin, white coloured.
• Pins in austentic chrome-nickel stainless steel, work hardened for high resistance.

PRODUCT CODE	INTERNAL CODE	CHARACTERISTICS				
		Radius R (mm)	GC st. (mm)	GC sid. (mm)	Working Load Max N (21°C)	Weight kg/m
WLF 1701 TAB	1701.TAB.WA	150	57.5	56.0	4000	1.50

* If R > 500, GC = 55
- Standard shipping lengths = 122 pitches = 20 feet = 6,10 metres.

biplanar thermoplastic chains

1702 / 1703 SERIES



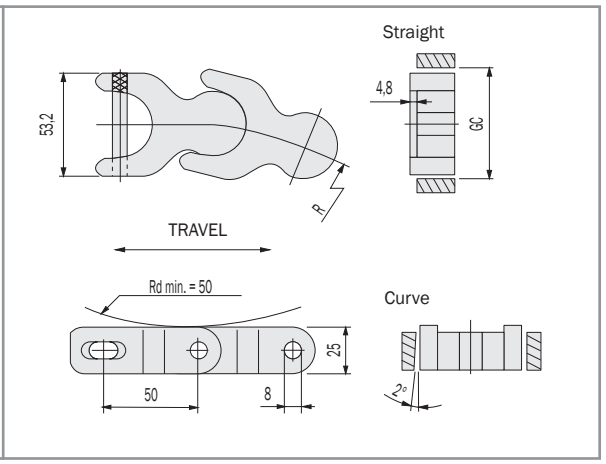

WLF 1702 - LOW FRICTION ACETAL RESIN

p.195
p.213
upon request

• Plates in self-lubricating low friction acetal resin, white coloured.
• Pins in austentic chrome-nickel stainless steel, work hardened for high resistance.

PRODUCT CODE	INTERNAL CODE	CHARACTERISTICS				
		Radius R (mm)	GC st. (mm)	GC sid. (mm)	Working Load Max N (21°C)	Weight kg/m
WLF 1702	1702.WA	140	59.5	56.8	4000	1.43

- Standard shipping lengths = 122 pitches = 20 feet = 6,10 metres.



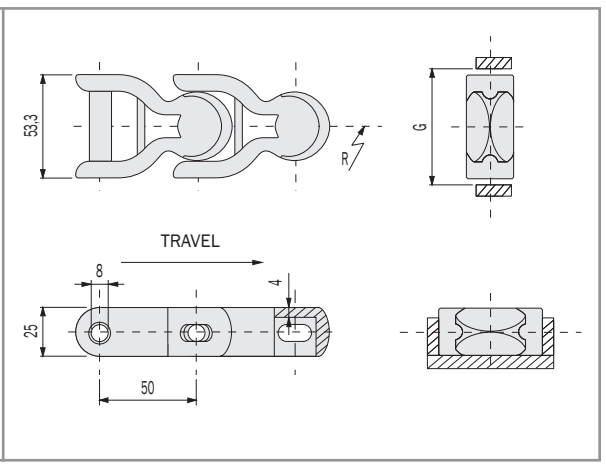

WLF 1703 - LOW FRICTION ACETAL RESIN

p.195
p.213
upon request

• Plates in self-lubricating low friction acetal resin, white coloured.
• The open design ensures optimum cleaning possibilities.
• Pins in austentic chrome-nickel stainless steel, work hardened for high resistance.

PRODUCT CODE	INTERNAL CODE	CHARACTERISTICS				
		Radius R (mm)	GC st. (mm)	GC sid. (mm)	Working Load Max N (21°C)	Weight kg/m
WLF 1703	1703.WA	150	58.7	56.9	4000	1.43

- Standard shipping lengths = 122 pitches = 20 feet = 6,10 metres.

biplanar thermoplastic chains accessories

CHAIN PEGS



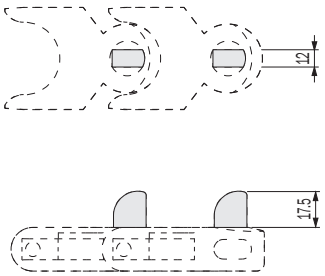

AVAILABLE FOR - 1500, 1700, 1700 TAB, 1701, 1701 TAB, 1702, 1703 SERIES

• Pegs in self-lubricating low friction acetal resin or Polypropylene, white coloured.

PRODUCT CODE	INTERNAL CODE
Code biplanar thermoplastic chains + M	Ex: 1702.WA.M

- When ordering, please state the required distance between the pegs.

case conveyor chains

D 600 / D 600 C SERIES



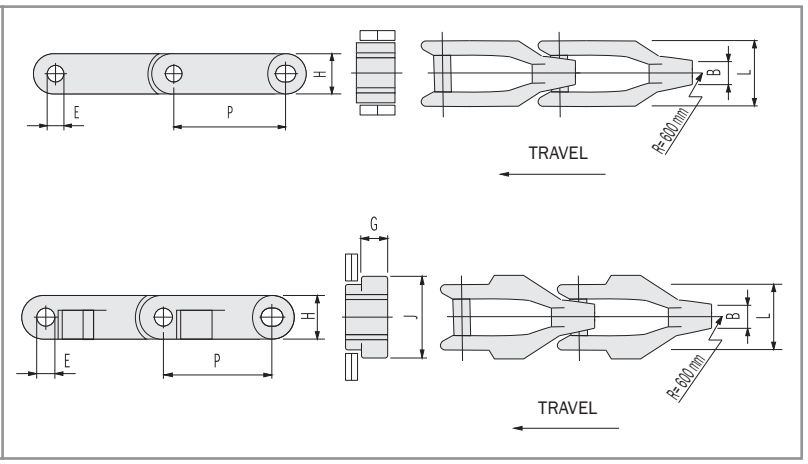

D 600 - D 600 TAB - ACETAL RESIN

• Plates in self-lubricating acetal resin, white coloured.
• Pins in austentic chrome-nickel stainless steel, work hardened for high resistance.

p.198
p.213

PRODUCT CODE	INTERNAL CODE	CHARACTERISTICS								
		Pich P (mm)	L (mm)	Diam. E (mm)	B (mm)	H (mm)	J (mm)	G (mm)	Work. Load Max N (21°C)	Weight kg/m
D 600	600.D	63.5	43	11.0	18.0	28.5	-	-	6000	1.44
	TAB									
D 600 TAB	600.TAB.D.	63.5	43	11.0	18.0	28.5	54	14	6000	1.49

- Standard shipping lengths = 96 pitches = 20 feet = 6,096 metres.



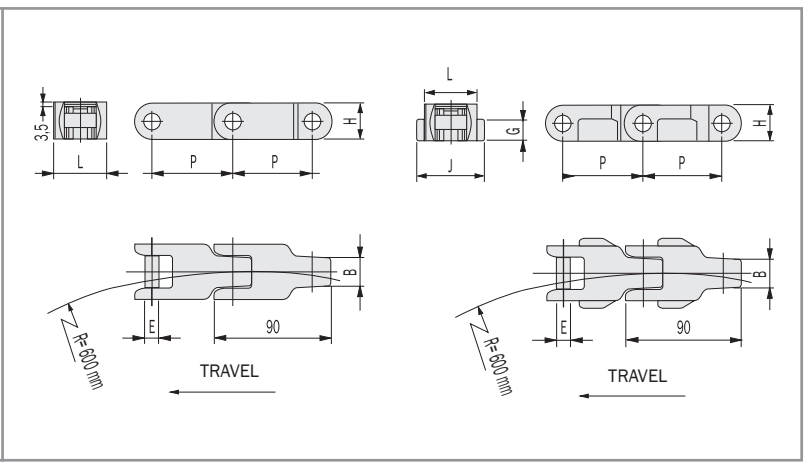

D 600 C - D 600 TAB C - ACETAL RESIN

• Plates in self-lubricating acetal resin, white coloured.
• Pins in austentic chrome-nickel stainless steel, work hardened for high resistance.

p.198
p.213

PRODUCT CODE	INTERNAL CODE	CHARACTERISTICS								
		Pich P (mm)	L (mm)	Diam. E (mm)	B (mm)	H (mm)	J (mm)	G (mm)	Work. Load Max N (21°C)	Weight kg/m
D 600 C	600.D.C	63.5	43	11.0	18.0	28.5	-	-	6000	1.42
	TAB									
D 600 TAB C	600.TAB.D.C	63.5	43	11.0	18.0	28.5	54	14	6000	1.55

- Standard shipping lengths = 96 pitches = 20 feet = 6,096 metres.

case conveyor chains

D 1400 SERIES



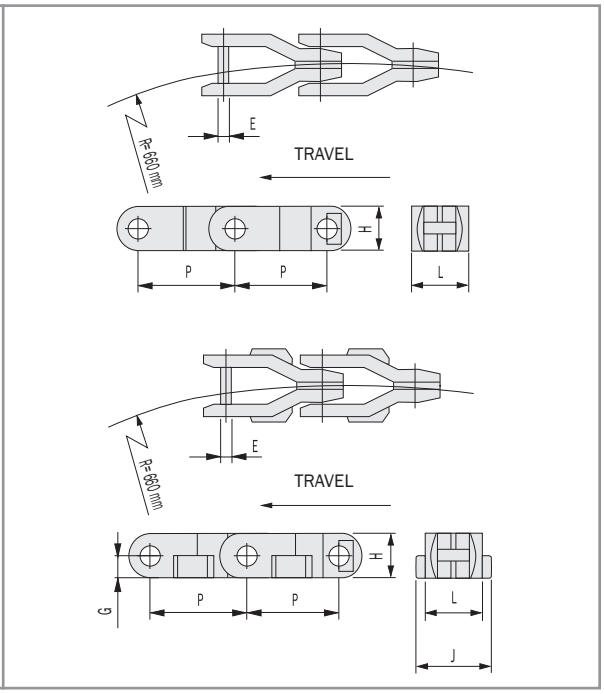

D 1400 - D 1400 TAB - ACETAL RESIN

p.199

- Plates in self-lubricating acetal resin, white coloured.
- Pins in austentic chrome-nickel stainless steel, work hardened for high resistance.

PRODUCT CODE	INTERNAL CODE	CHARACTERISTICS							
		Pich P (mm)	L (mm)	Diam. E (mm)	H (mm)	J (mm)	G (mm)	Work. Load Max N (21°C)	Weight kg/m
D 1400	1400.D	82.5	50	9.5	38.5	-	-	6000	1.44
	TAB								
D 1400 TAB	1400.TAB.D	82.5	50	9.5	38.5	66.0	19.25	6000	2.26

- Standard shipping lengths = 74 pitches = 20 feet = 6,105 metres.

thermoplastic straight runn. conveyor belts

720 SERIES - NEW PIN LOCK SYSTEM

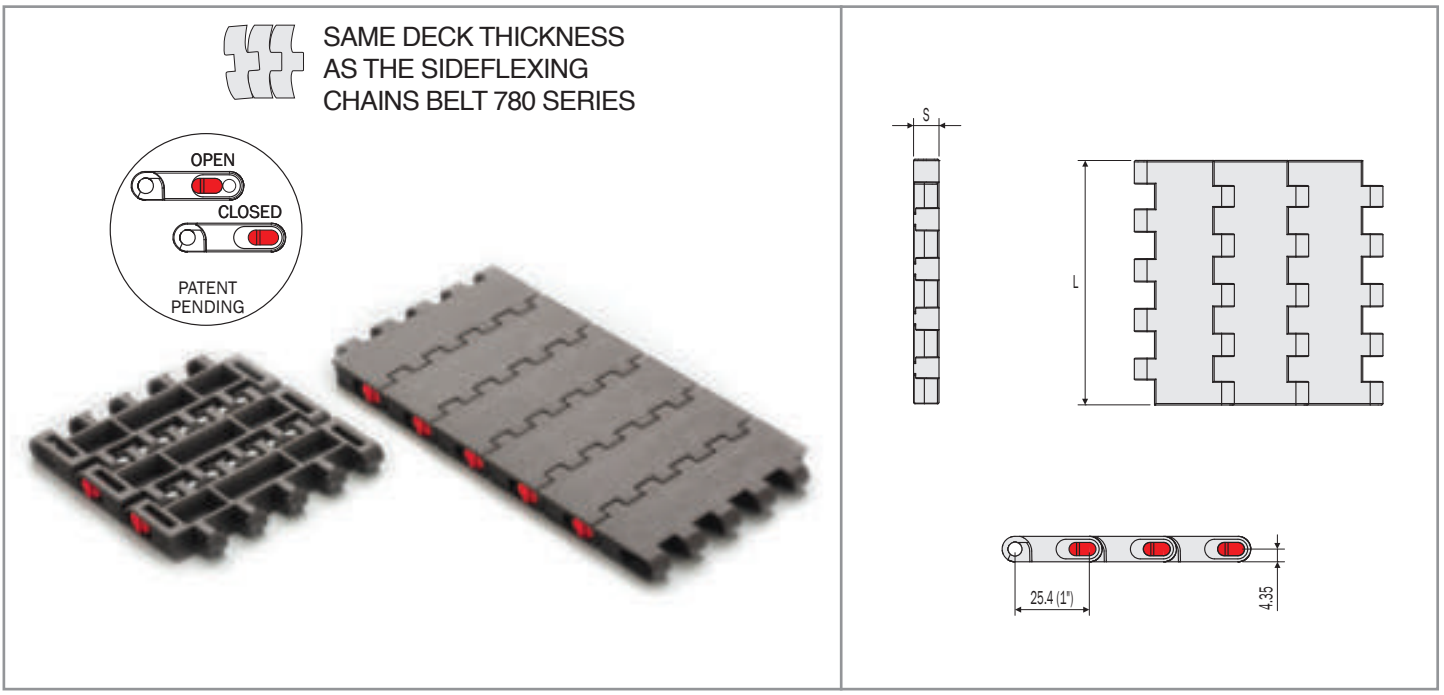

LFA 720 - LOW FRICTION ACETAL RESIN

p.200 p.230 p.232

• Plates in self-lubricating low friction acetal resin, light-brown or blue-coloured.
• Pins material: Pbt.

PRODUCT CODE	INTERNAL CODE	CHARACTERISTICS			
		Width L (mm)	Thickness S (mm)	Working Load Max N (21°C)	Weight kg/m
LFA 720 K325	9.10.040	82.5	8.7	25000	0.63
LFA 720 K330	9.10.042	83.8	8.7	25000	0.65
LFA 720 K335	9.10.050	85.0	8.7	25000	0.66
LFA 720 K450	9.10.080	114.3	8.7	25000	0.87

- Standard shipping lengths = 120 pitches = 10 feet = 3,048 metres.

SP 720 - SUPER PERFORMANCE ACETAL RESIN

p.200 p.230 p.232

• Plates in self-lubricating very low friction acetal resin, dark grey-coloured.
• Pins material: Pbt.

PRODUCT CODE	INTERNAL CODE	CHARACTERISTICS			
		Width L (mm)	Thickness S (mm)	Working Load Max N (21°C)	Weight kg/m
SP 720 K325	9.20.040	82.5	8.7	25000	0.63
SP 720 K330	9.20.042	83.8	8.7	25000	0.65
SP 720 K335	9.20.050	85.0	8.7	25000	0.66
SP 720 K450	9.20.080	114.3	8.7	25000	0.87

- Standard shipping lengths = 120 pitches = 10 feet = 3,048 metres.

Available also in: **WRX** material black-colour (PA)
PBT material green-colour (Polyester)
AK material dark grey or (POM with aramidic fibers) yellow-colour
WAF material white-colour (POM)
PPB material white-colour (PP)

thermoplastic straight runn. conveyor belts

720 PT SERIES WITH TWO POSITIONERS - NEW PIN LOCK SYSTEM

SAME DECK THICKNESS
AS THE SIDEFLEXING
CHAINS BELT 780 SERIES

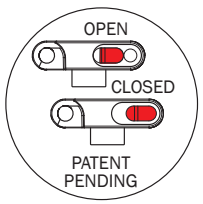

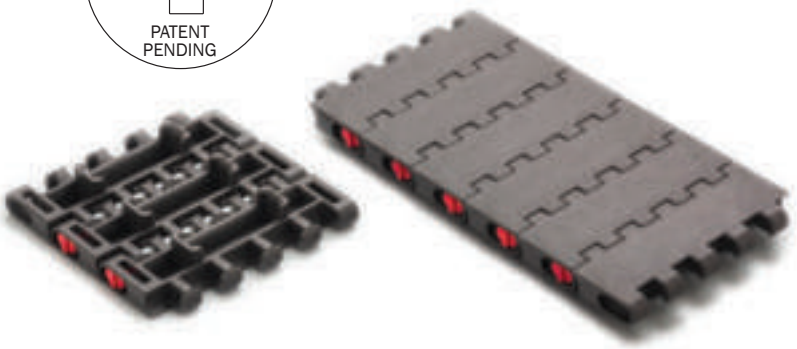

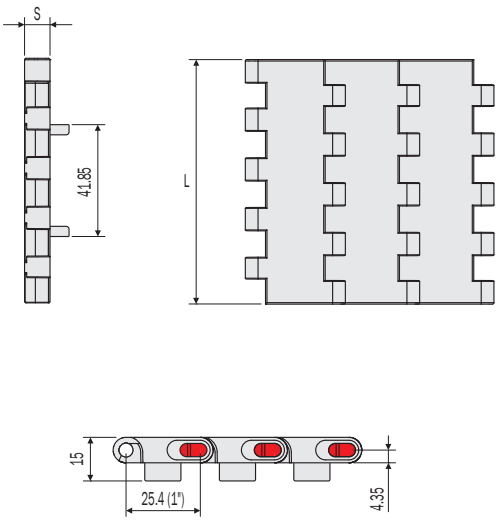

LFA 720 PT - LOW FRICTION ACETAL RESIN

p.200 p.230 p.232

- Plates in self-lubricating low friction acetal resin, light-brown or blue-coloured.
- Pins material: Pbt.

PRODUCT CODE	INTERNAL CODE	CHARACTERISTICS			
		Width L (mm)	Thickness S (mm)	Working Load Max N (21°C)	Weight kg/m
LFA 720 PT K325	9.10.040PT	82.5	8.7	25000	0.64
LFA 720 PT K330	9.10.042PT	83.8	8.7	25000	0.66
LFA 720 PT K335	9.10.050PT	85.0	8.7	25000	0.67
LFA 720 PT K450	9.10.080PT	114.3	8.7	25000	0.88

- Standard shipping lengths = 120 pitches = 10 feet = 3,048 metres.

SP 720 PT - SUPER PERFORMANCE ACETAL RESIN

p.200 p.230 p.232

- Plates in self-lubricating very low friction acetal resin, dark grey-coloured.
- Pins material: Pbt.

PRODUCT CODE	INTERNAL CODE	CHARACTERISTICS			
		Width L (mm)	Thickness S (mm)	Working Load Max N (21°C)	Weight kg/m
SP 720 PT K325	9.20.04PT	82.5	8.7	25000	0.64
SP 720 PT K330	9.20.042PT	83.8	8.7	25000	0.66
SP 720 PT K335	9.20.050PT	85.0	8.7	25000	0.67
SP 720 PT K450	9.20.080PT	114.3	8.7	25000	0.88

- Standard shipping lengths = 120 pitches = 10 feet = 3,048 metres.

Available also in: **WRX** material black-colour (PA)
PBT material green-colour (Polyester)
AK material dark grey or (POM with aramidic fibers) yellow-colour
WAF material white-colour (POM)
PPB material white-colour (PP)

thermoplastic straight runn. conveyor belts

730 SERIES - NEW PIN LOCK SYSTEM

SAME DECK THICKNESS
AS THE SIDEFLEXING
CHAINS BELT 790 SERIES

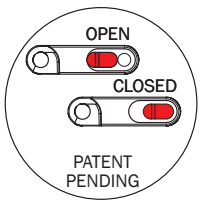

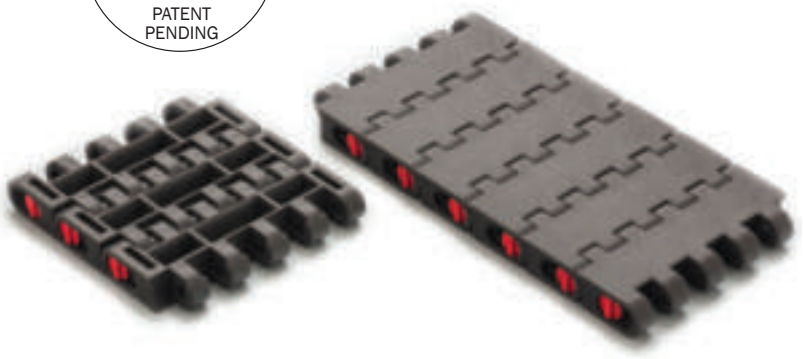

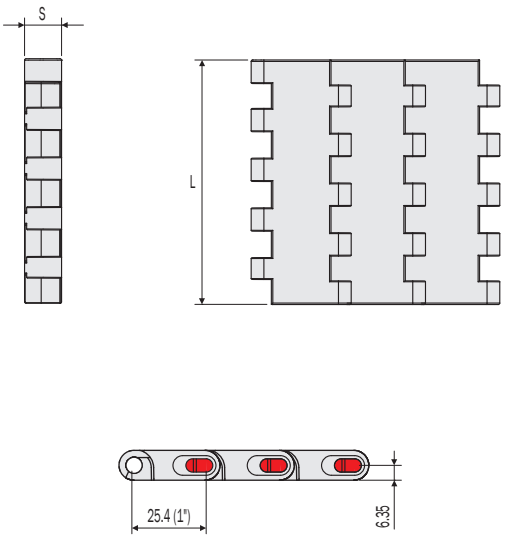

LFA 730 - LOW FRICTION ACETAL RESIN

p.202 p.230 p.232

• Plates in self-lubricating low friction acetal resin, light-brown or blue-coloured.
• Pins material: Pbt.

PRODUCT CODE	INTERNAL CODE	CHARACTERISTICS			
		Width L (mm)	Thickness S (mm)	Working Load Max N (21°C)	Weight kg/m
LFA 730 K325	9.11.040	82.5	12.7	38000	1.18
LFA 730 K330	9.11.042	83.8	12.7	38000	1.20
LFA 730 K335	9.11.050	85.0	12.7	38000	1.22
LFA 730 K450	9.11.080	114.3	12.7	38000	1.64

- Standard shipping lengths = 120 pitches = 10 feet = 3,048 metres.

SP 730 - SUPER PERFORMANCE ACETAL RESIN

p.202 p.230 p.232

• Plates in self-lubricating very low friction acetal resin, dark grey-coloured.
• Pins material: Pbt.

PRODUCT CODE	INTERNAL CODE	CHARACTERISTICS			
		Width L (mm)	Thickness S (mm)	Working Load Max N (21°C)	Weight kg/m
SP 730 K325	9.21.040	82.5	12.7	38000	1.18
SP 730 K330	9.21.042	83.8	12.7	38000	1.20
SP 730 K335	9.21.050	85.0	12.7	38000	1.22
SP 730 K450	9.21.080	114.3	12.7	38000	1.64

- Standard shipping lengths = 120 pitches = 10 feet = 3,048 metres.

Available also in: **WRX** material black-colour (PA)
PBT material green-colour (Polyester)
AK material dark grey or (POM with aramidic fibers) yellow-colour
WAF material white-colour (POM)
PPB material white-colour (PP)

thermoplastic straight runn. conveyor belts

730 PT SERIES WITH TWO POSITIONERS - NEW PIN LOCK SYSTEM

SAME DECK THICKNESS
AS THE SIDEFLEXING
CHAINS BELT 790 SERIES

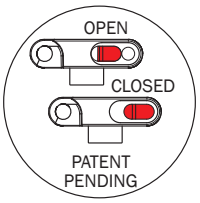

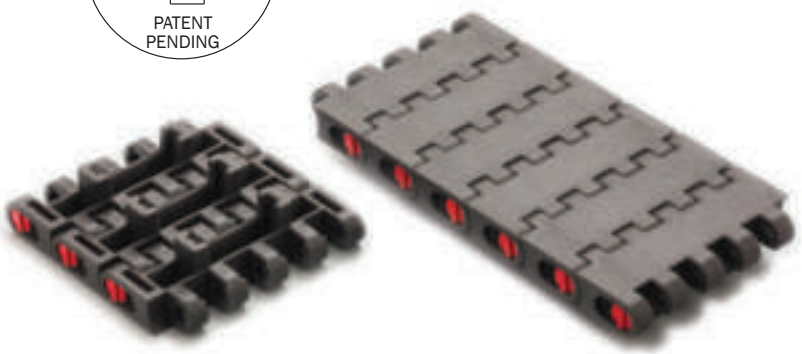

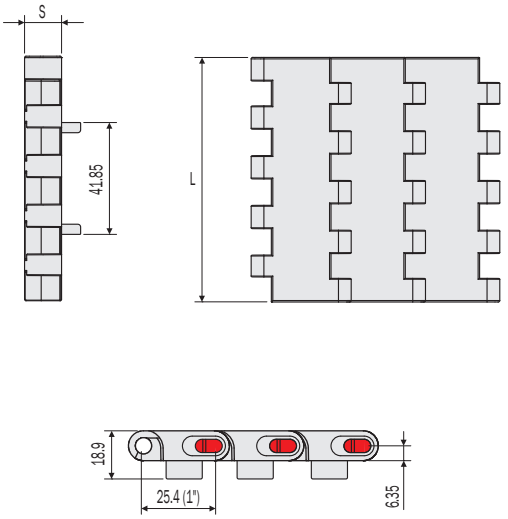

LFA 730 PT - LOW FRICTION ACETAL RESIN

p.202 p.230 p.232

- Plates in self-lubricating low friction acetal resin, light-brown or blue-coloured.
- Pins material: Pbt.

PRODUCT CODE	INTERNAL CODE	CHARACTERISTICS			
		Width L (mm)	Thickness S (mm)	Working Load Max N (21°C)	Weight kg/m
LFA 730 PT K325	9.11.040PT	82.5	12.7	38000	1.19
LFA 730 PT K330	9.11.042PT	83.8	12.7	38000	1.21
LFA 730 PT K335	9.11.050PT	85.0	12.7	38000	1.23
LFA 730 PT K450	9.11.080PT	114.3	12.7	38000	1.65

- Standard shipping lengths = 120 pitches = 10 feet = 3,048 metres.

SP 730 PT - SUPER PERFORMANCE ACETAL RESIN

p.202 p.230 p.232

- Plates in self-lubricating very low friction acetal resin, dark grey-coloured.
- Pins material: Pbt.

PRODUCT CODE	INTERNAL CODE	CHARACTERISTICS			
		Width L (mm)	Thickness S (mm)	Working Load Max N (21°C)	Weight kg/m
SP 730 PT K325	9.21.040PT	82.5	12.7	38000	1.19
SP 730 PT K330	9.21.042PT	83.8	12.7	38000	1.21
SP 730 PT K335	9.21.050PT	85.0	12.7	38000	1.23
SP 730 PT K450	9.21.080PT	114.3	12.7	38000	1.65

- Standard shipping lengths = 120 pitches = 10 feet = 3,048 metres.

Available also in: **WRX** material black-colour (PA)
PBT material green-colour (Polyester)
AK material dark grey or (POM with aramidic fibers) yellow-colour
WAF material white-colour (POM)
PPB material white-colour (PP)

thermoplastic sideflexing chains

780 TAB SERIES



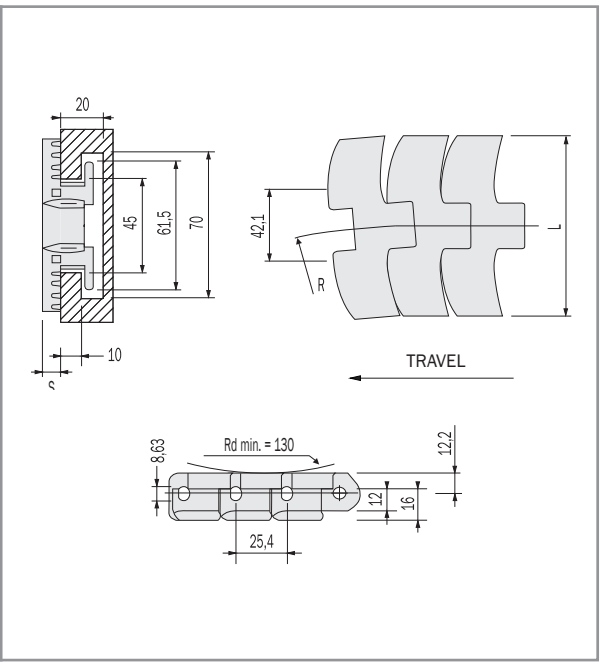

LFA 780 TAB - LOW FRICTION ACETAL RESIN

p.194 p.218 p.228 p.232

• Plates in self-lubricating low friction acetal resin, light brown or blue-coloured.
• Pins in special chrome-nickel stainless steel, work hardened for high resistance.

PRODUCT CODE	INTERNAL CODE	CHARACTERISTICS				
		Width L (mm)	S (mm)	Radius R (mm)	Working Load Max N (21°C)	Weight kg/m
LFA 780 TAB K330	9.12.042	83.8	8.7	500	2000	1.93
LFA 780 TAB K450	9.12.081	114.3	8.7	500	2000	2.20

- Standard shipping lengths = 120 pitches = 10 feet = 3,048 metres.
- These chains can be supplied with pins in austenitic stainless steel, work hardened, highly wear resistant.

SP 780 TAB - SUPER PERFORMANCE ACETAL RESIN

p.194 p.218 p.228 p.232

• Plates in self-lubricating very low friction acetal resin, dark grey-coloured.
• Pins in special chrome-nickel stainless steel, work hardened for high resistance.

PRODUCT CODE	INTERNAL CODE	CHARACTERISTICS				
		Width L (mm)	S (mm)	Radius R (mm)	Working Load Max N (21°C)	Weight kg/m
SP 780 TAB K330	9.22.042	83.8	8.7	500	2000	1.93
SP 780 TAB K450	9.22.081	114.3	8.7	500	2000	2.20

- Standard shipping lengths = 120 pitches = 10 feet = 3,048 metres.
- These chains can be supplied with pins in austenitic stainless steel, work hardened, highly wear resistant.

thermoplastic sideflexing chains

790 TAB SERIES



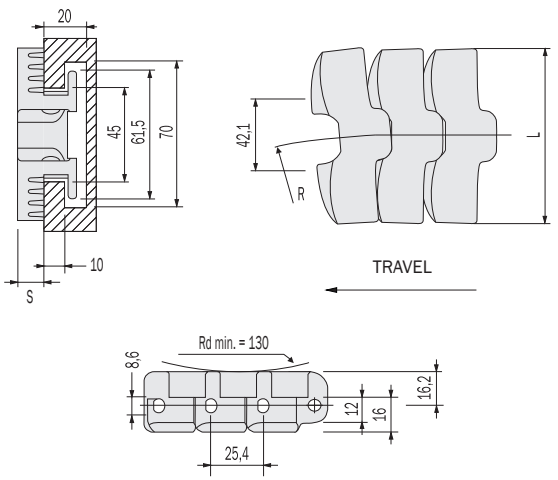

LFA 790 TAB - LOW FRICTION ACETAL RESIN

p.194 p.218 p.228 p.232

• Plates in self-lubricating low friction acetal resin, light brown-coloured.
• Pins in special chrome-nickel stainless steel, work hardened for high resistance.

PRODUCT CODE	INTERNAL CODE	CHARACTERISTICS				
		Width L (mm)	S (mm)	Radius R (mm)	Working Load Max N (21°C)	Weight kg/m
LFA 790 TAB K330	9.15.042	83.8	12.7	500	2200	2.13
LFA 790 TAB K450	9.15.081	114.3	12.7	500	2200	2.42

- Standard shipping lengths = 120 pitches = 10 feet = 3,048 metres.
- These chains can be supplied with pins in austenitic stainless steel, work hardened, highly wear resistant.

SP 790 TAB - SUPER PERFORMANCE ACETAL RESIN

p.194 p.218 p.228 p.232

• Plates in self-lubricating very low friction acetal resin, dark grey-coloured.
• Pins in special chrome-nickel stainless steel, work hardened for high resistance.

PRODUCT CODE	INTERNAL CODE	CHARACTERISTICS				
		Width L (mm)	S (mm)	Radius R (mm)	Working Load Max N (21°C)	Weight kg/m
SP 790 TAB K330	9.25.042	83.8	12.7	500	2200	2.13
SP 790 TAB K450	9.25.081	114.3	12.7	500	2200	2.42

- Standard shipping lengths = 120 pitches = 10 feet = 3,048 metres.
- These chains can be supplied with pins in austenitic stainless steel, work hardened, highly wear resistant.

thermoplastic sideflexing chains

ON MAGNETIC TRACKS - 780 M SERIES



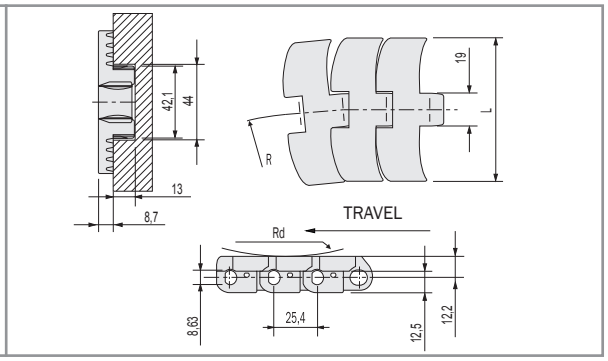

LFA 780 M - LOW FRICTION ACETAL RESIN

p.194 p.107 p.230 p.232

• Plates in self-lubricating low friction acetal resin, light brown-coloured.
• Pins in special stainless steel, 400 series, work hardened, magnetic, highly wear resistant.

PRODUCT CODE	INTERNAL CODE	CHARACTERISTICS				
		Width L (mm)	Rd (mm)	Radius R (mm)	Working Load Max N (21°C)	Weight kg/m
LFA 780 M K330	9.18.042	83.8	130	500	2000	1.68
LFA 780 M K450	9.18.080	114.3	130	500	2000	1.97

SP 780 M - SUPER PERFORMANCE ACETAL RESIN

p.194 p.107 p.230 p.232

• Plates in self-lubricating very low friction acetal resin, dark grey-coloured.
• Pins in special stainless steel, 400 series, work hardened, magnetic, highly wear resistant.

PRODUCT CODE	INTERNAL CODE	CHARACTERISTICS				
		Width L (mm)	Rd (mm)	Radius R (mm)	Working Load Max N (21°C)	Weight kg/m
SP 780 M K330	9.28.042	83.8	130	500	2000	1.68
SP 780 M K450	9.28.080	114.3	130	500	2000	1.97

WRX 780 M - WEAR RESISTANT POLYAMIDE COMPOSITE

p.194 p.107 p.230 p.232

• Plates in thermoplastic wear resistant polyamide composite, black-coloured.
• Pins in special stainless steel, 400 series, work hardened, magnetic, highly wear resistant.

PRODUCT CODE	INTERNAL CODE	CHARACTERISTICS				
		Width L (mm)	Rd (mm)	Radius R (mm)	Working Load Max N (21°C)	Weight kg/m
WRX 780 M K330	9.58.042	83.8	130	500	2000	1.68
WRX 780 M K450	9.58.080	114.3	130	500	2000	1.97

AK 780 M - HIGH WEAR RESISTANT ACETAL RESIN

p.194 p.107 p.230 p.232

• Plates in a very special acetal resin with aramidic fibers, dark grey-coloured.
• Pins in special stainless steel, 400 series, work hardened, magnetic, highly wear resistant.

PRODUCT CODE	INTERNAL CODE	CHARACTERISTICS				
		Width L (mm)	Rd (mm)	Radius R (mm)	Working Load Max N (21°C)	Weight kg/m
AK 780 M K330	9.88.042	83.8	130	500	2000	1.68
AK 780 M K450	9.88.080	114.3	130	500	2000	1.97

- Standard shipping lengths = 120 pitches = 10 feet = 3,048 metres.
- The above-mentioned chains can also be produced in special acetal resin, with aramidic fibers yellow-coloured. (FOR AK 780 M)

thermoplastic sideflexing chains

ON MAGNETIC TRACKS - 790 M SERIES



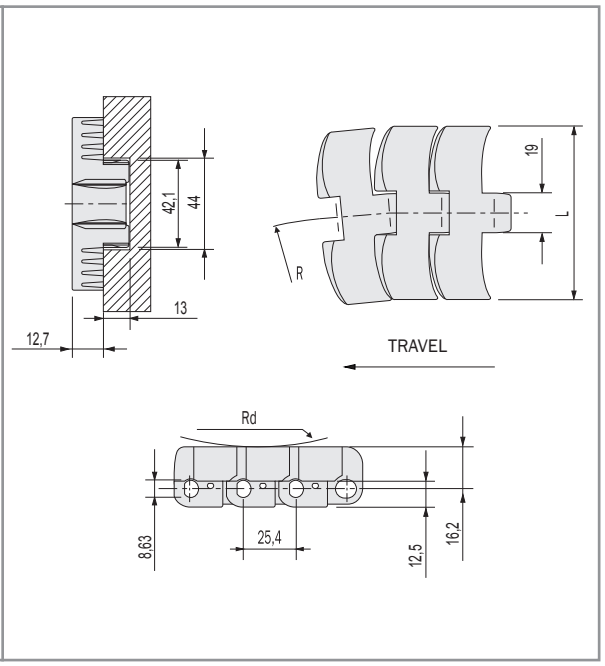

LFA 790 M - LOW FRICTION ACETAL RESIN

p.194 p.107 p.230 p.232

• Plates in self-lubricating low friction acetal resin, light brown-coloured.
• Pins in special stainless steel, 400 series, work hardened, magnetic, highly wear resistant.

PRODUCT CODE	INTERNAL CODE	CHARACTERISTICS				
		Width L (mm)	Rd (mm)	Radius R (mm)	Working Load Max N (21°C)	Weight kg/m
LFA 790 M K330	9.19.042	83.8	130	500	2200	1.68
LFA 790 M K450	9.19.080	114.3	130	500	2200	1.90

- Standard shipping lengths = 120 pitches = 10 feet = 3,048 metres.

SP 790 M - SUPER PERFORMANCE ACETAL RESIN

p.194 p.107 p.230 p.232

• Plates in self-lubricating very low friction acetal resin, dark grey-coloured.
• Pins in special stainless steel, 400 series, work hardened, magnetic, highly wear resistant.

PRODUCT CODE	INTERNAL CODE	CHARACTERISTICS				
		Width L (mm)	Rd (mm)	Radius R (mm)	Working Load Max N (21°C)	Weight kg/m
SP 790 M K330	9.29.042	83.8	130	500	2200	1.68
SP 790 M K450	9.29.080	114.3	130	500	2200	1.90

- Standard shipping lengths = 120 pitches = 10 feet = 3,048 metres.

thermoplastic sideflexing chains

ON MAGNETIC TRACKS - 780 MFG SERIES



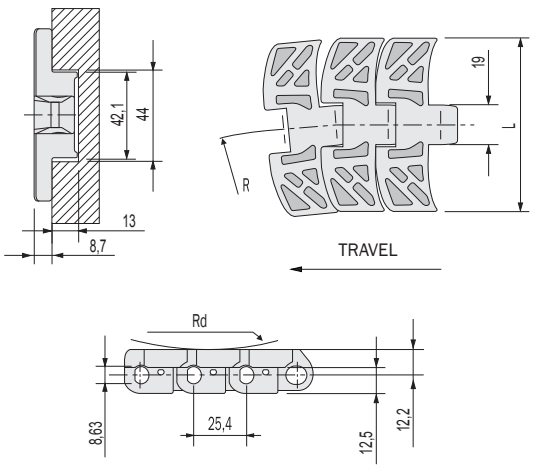

LFA 780 MFG - LOW FRICTION ACETAL RESIN

p.194 p.107 p.230 p.232

• Plates in self-lubricating low friction acetal resin, light brown-coloured.
• Pins in special stainless steel, 400 series, work hardened, magnetic, highly wear resistant.

PRODUCT CODE	INTERNAL CODE	CHARACTERISTICS				
		Width L (mm)	Rd (mm)	Radius R (mm)	Working Load Max N (21°C)	Weight kg/m
LFA 780 MFG K330	9.18.242	83.8	130	500	1900	1.54

SP 780 MFG - SUPER PERFORMANCE ACETAL RESIN

p.194 p.107 p.230 p.232

• Plates in self-lubricating very low friction acetal resin, dark grey-coloured.
• Pins in special stainless steel, 400 series, work hardened, magnetic, highly wear resistant.

PRODUCT CODE	INTERNAL CODE	CHARACTERISTICS				
		Width L (mm)	Rd (mm)	Radius R (mm)	Working Load Max N (21°C)	Weight kg/m
SP 780 MFG K330	9.28.242	83.8	130	500	1900	1.54

WRX 780 MFG - WEAR RESISTANT POLYAMIDE COMPOSITE

p.194 p.107 p.230 p.232

• Plates in thermoplastic wear resistant polyamide composite, black-coloured.
• Pins in special stainless steel, 400 series, work hardened, magnetic, highly wear resistant.

PRODUCT CODE	INTERNAL CODE	CHARACTERISTICS				
		Width L (mm)	Rd (mm)	Radius R (mm)	Working Load Max N (21°C)	Weight kg/m
WRX 780 MFG K330	9.58.242	83.8	130	500	1900	1.54

AK 780 MFG - HIGH WEAR RESISTANT ACETAL RESIN

p.194 p.107 p.230 p.232

• Plates in a very special acetal resin with aramidic fibers, dark grey-coloured.
• Pins in special stainless steel, 400 series, work hardened, magnetic, highly wear resistant.

PRODUCT CODE	INTERNAL CODE	CHARACTERISTICS				
		Width L (mm)	Rd (mm)	Radius R (mm)	Working Load Max N (21°C)	Weight kg/m
AK 780 MFG K330	9.88.242	83.8	130	500	1900	1.54

- Standard shipping lengths = 120 pitches = 10 feet = 3,048 metres.
- The above-mentioned chains can also be produced in special acetal resin, with aramidic fibers yellow-coloured. (FOR AK 780 MFG)

thermoplastic sideflexing chains

780 TAB FG SERIES



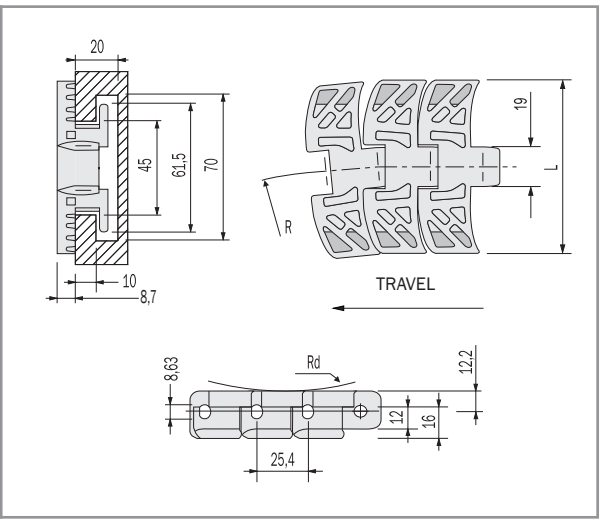

LFA 780 TAB FG - LOW FRICTION ACETAL RESIN

• Plates in self-lubricating low friction acetal resin, light brown-coloured.
• Pins in special stainless steel, work hardened, highly wear resistant.

p.194 p.218 p.228 p.232

PRODUCT CODE	INTERNAL CODE	CHARACTERISTICS				
		Width L (mm)	Rd (mm)	Radius R (mm)	Working Load Max N (21°C)	Weight kg/m
LFA 780 TAB FG K330	9.12.242	83.8	130	500	1900	1.77

SP 780 TAB FG - SUPER PERFORMANCE ACETAL RESIN

• Plates in self-lubricating very low friction acetal resin, dark grey-coloured.
• Pins in special stainless steel, work hardened, highly wear resistant.

p.194 p.218 p.228 p.232

PRODUCT CODE	INTERNAL CODE	CHARACTERISTICS				
		Width L (mm)	Rd (mm)	Radius R (mm)	Working Load Max N (21°C)	Weight kg/m
SP 780 TAB FG K330	9.22.242	83.8	130	500	1900	1.77

WRX 780 TAB FG - WEAR RESISTANT POLYAMIDE COMPOSITE

• Plates in thermoplastic wear resistant polyamide composite, black-coloured.
• Pins in special stainless steel, work hardened, highly wear resistant.

p.194 p.218 p.228 p.232

PRODUCT CODE	INTERNAL CODE	CHARACTERISTICS				
		Width L (mm)	Rd (mm)	Radius R (mm)	Working Load Max N (21°C)	Weight kg/m
WRX 780 TAB FG K330	9.52.242	83.8	130	500	1900	1.77

AK 780 TAB FG - HIGH WEAR RESISTANT ACETAL RESIN

• Plates in a very special acetal resin with aramidic fibers, dark grey-coloured.
• Pins in special stainless steel, work hardened, highly wear resistant.

p.194 p.218 p.228 p.232

PRODUCT CODE	INTERNAL CODE	CHARACTERISTICS				
		Width L (mm)	Rd (mm)	Radius R (mm)	Working Load Max N (21°C)	Weight kg/m
AK 780 TAB FG K330	9.82.242	83.8	130	500	1900	1.77

- Standard shipping lengths = 120 pitches = 10 feet = 3,048 metres.
- The above-mentioned chains can also be produced in special acetal resin, with aramidic fibers yellow-coloured. (FOR AK 780 TAB FG)

plastic corrosion resistance table

LEGEND

○ = Little resistance - not recommended
● = Average resistance
● ● = Good resistance - it can be used

	CHEMICAL AGENT	ACETAL RESIN D	ACETAL RESIN LFA / WLF	ACETAL RESIN SP / AK	POLYAMIDE COMPOSITE WRX	ANTISTATIC RESIN AS	POLYPROPYLENE PPB	POLYESTER PBT
A	Acetic acid	○	○	○	○	○	● ●	● ●
	Acetone	●	●	●	● ●	●	● ●	●
	Aluminium chloride	○	○	○	● ●	○	○	–
	Ammonia	● ●	● ●	● ●	● ●	● ●	● ●	●
	Ammonium chloride	○	○	○	● ●	○	○	–
	Amyl alcohol	○	○	○	● ●	○	● ●	–
	Aniline	● ●	● ●	● ●	●	● ●	● ●	–
B	Beer	● ●	● ●	● ●	● ●	● ●	● ●	● ●
	Benzene	● ●	● ●	● ●	● ●	● ●	● ●	○
	Benzoic acid	○	○	○	●	○	● ●	–
	Benzol	● ●	● ●	● ●	● ●	● ●	● ●	● ●
	Boric acid	● ●	● ●	● ●	● ●	● ●	● ●	–
	Brine	●	●	●	●	●	● ●	–
	Butter	● ●	● ●	● ●	● ●	● ●	● ●	–
	Butyl alcohol	○	○	○	●	○	● ●	–
	Butyric acid	○	○	○	○	○	● ●	–
C	Calcium chloride	●	●	●	● ●	●	● ●	–
	Carbon disulphide	● ●	● ●	● ●	● ●	● ●	● ●	–
	Carbon tetrachloride	● ●	● ●	● ●	● ●	● ●	○	–
	Carbonated drinks	● ●	● ●	● ●	● ●	● ●	○	–
	Cheese	● ●	● ●	● ●	○	● ●	● ●	–
	Chlorine water	○	○	○	–	○	○	–
	Chloroform	○	○	○	○	○	○	–
	Citric acid	●	●	●	○	●	● ●	● ●
	Copper sulphate	● ●	● ●	● ●	–	● ●	● ●	–
D	Diet oil	● ●	● ●	● ●	–	● ●	● ●	–
	Diet fat	● ●	● ●	● ●	–	● ●	● ●	–
	Distilled water	● ●	● ●	● ●	● ●	● ●	● ●	–
E	Ethyl acetate	○	○	○	● ●	○	● ●	–
	Ethyl alcohol	● ●	● ●	● ●	● ●	● ●	● ●	–
	Ethyl chloride	● ●	● ●	● ●	● ●	● ●	○	–
	Ethyl ether	● ●	● ●	● ●	● ●	● ●	● ●	–
F	Flax oil	○	○	○	● ●	○	● ●	–
	Formaldehyde	● ●	● ●	● ●	● ●	● ●	● ●	–
	Formic acid	○	○	○	○	○	● ●	●
	Freon 12	○	○	○	● ●	○	○	–
	Fresh water	● ●	● ●	● ●	● ●	● ●	● ●	● ●
	Fruit juice	● ●	● ●	● ●	● ●	● ●	● ●	● ●
G	Gasoline	● ●	● ●	● ●	● ●	● ●	●	–
	Glycerine	● ●	● ●	● ●	● ●	● ●	● ●	–
H	Hydrochloric acid	○	○	○	○	○	● ●	●
	Hydrofluoric acid	○	○	○	○	○	● ●	–
	Hydrogen peroxide	○	○	○	○	○	● ●	–
I	Iodine	● ●	● ●	● ●	○	● ●	● ●	–
	Iron chloride	○	○	○	–	○	● ●	–
L	Lactid acid	● ●	● ●	● ●	● ●	● ●	● ●	● ●
M	Magnesium chloride	○	○	○	● ●	○	● ●	–
	Mercury	● ●	● ●	● ●	● ●	● ●	● ●	–
	Methyl alcohol	● ●	● ●	● ●	● ●	● ●	● ●	–
	Methylene chloride	○	○	○	● ●	○	●	–
	Milk	● ●	● ●	● ●	● ●	● ●	● ●	● ●
N	Nitric acid	○	○	○	○	○	● ●	○
O	Oil	● ●	● ●	● ●	● ●	● ●	●	○
	Oil ether	● ●	● ●	● ●	● ●	● ●	● ●	–
	Oleic acid	○	○	○	● ●	○	● ●	–
P	Paraffin	● ●	● ●	● ●	○	● ●	●	● ●
	Phenol	○	○	○	○	○	● ●	–
	Phosphoric acid	○	○	○	○	○	● ●	●
	Potassium hydroxine	○	○	○	● ●	○	○	–
S	Sea water	●	●	●	● ●	●	● ●	● ●
	Silicone oil	○	○	○	● ●	○	● ●	–
	Silver nitrate	○	○	○	● ●	○	● ●	–
	Soapy water	● ●	● ●	● ●	● ●	● ●	● ●	● ●
	Sodium carbonate	● ●	● ●	● ●	● ●	● ●	● ●	–
	Sodium chloride	● ●	● ●	● ●	● ●	● ●	● ●	–
	Sodium hydroxine	● ●	● ●	● ●	● ●	● ●	● ●	○
	Sodium hypochlorite	○	○	○	● ●	○	● ●	●
	Sodium silicate	○	○	○	● ●	○	○	–
	Sodium sulphate	● ●	● ●	● ●	● ●	● ●	● ●	–
	Soft drinks	● ●	● ●	● ●	● ●	● ●	● ●	● ●
	Suds	○	○	○	● ●	○	● ●	–
	Sulfuric acid	○	○	○	○	○	● ●	● ●
T	Tartaric acid	●	●	●	● ●	●	● ●	–
	Tetrarline	○	○	○	● ●	○	○	–
	Tincture of iodine	● ●	● ●	● ●	○	● ●	● ●	–
	Transformer oil	○	○	○	● ●	○	●	–
	Trichlorethylene	○	○	○	○	○	●	–
	Turpentine	○	○	○	●	○	○	● ●
V	Vegetable juice	● ●	● ●	● ●	● ●	● ●	● ●	● ●
	Vegetable oil	● ●	● ●	● ●	● ●	● ●	● ●	○
	Vinegar	● ●	● ●	● ●	● ●	● ●	● ●	● ●
W	Whiskey	● ●	● ●	● ●	● ●	● ●	● ●	● ●
	Wine	● ●	● ●	● ●	● ●	● ●	● ●	● ●
X	Xilol	● ●	● ●	● ●	● ●	● ●	○	● ●
Z	Zinc chloride	○	○	○	○	○	● ●	–

Adeptrans Cadenas y Transmisiones S.L.

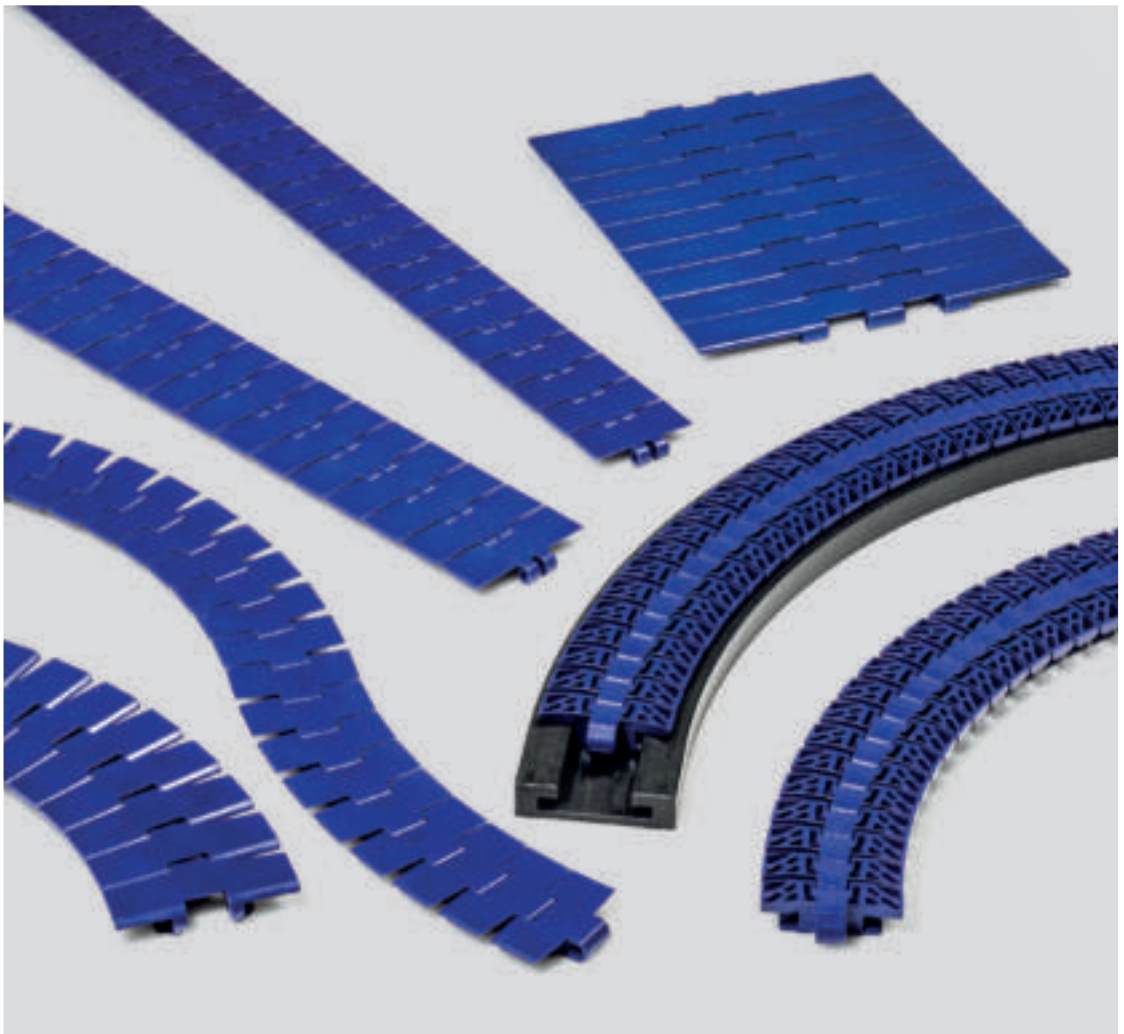

Food Industries

FdaApproved

916 926 286 · info@adeptrans.es

magnetic corner tracks



flat carrying surface

Magnetic curve is ideal solution for your corners.
Special integrated permanent magnets keep the chain in the curve. This system offers a flat carrying surface, therefore the best product stability and support. The complete curve consists of an upper part with magnets and a separate return part mounted together. The return infeed shoe will ensure smooth guiding of the chains into the return section.

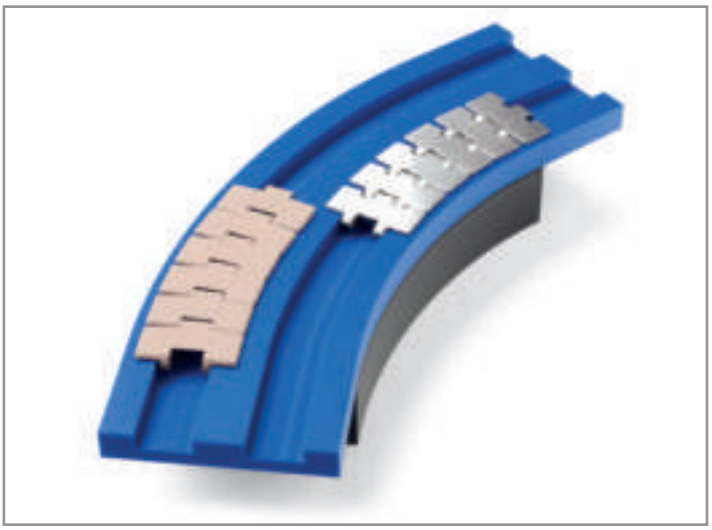

longer wearlife

Magnetic chains are also flatter since they have no tabs guides. Clearing the curve can be done easily by lifting the chain. The curve surface is closed and smooth to avoid dirt accumulation. This system provides a longer wearlife, because the bearing surface of the chains on the curve is larger than in other systems, the maintenance is easier.

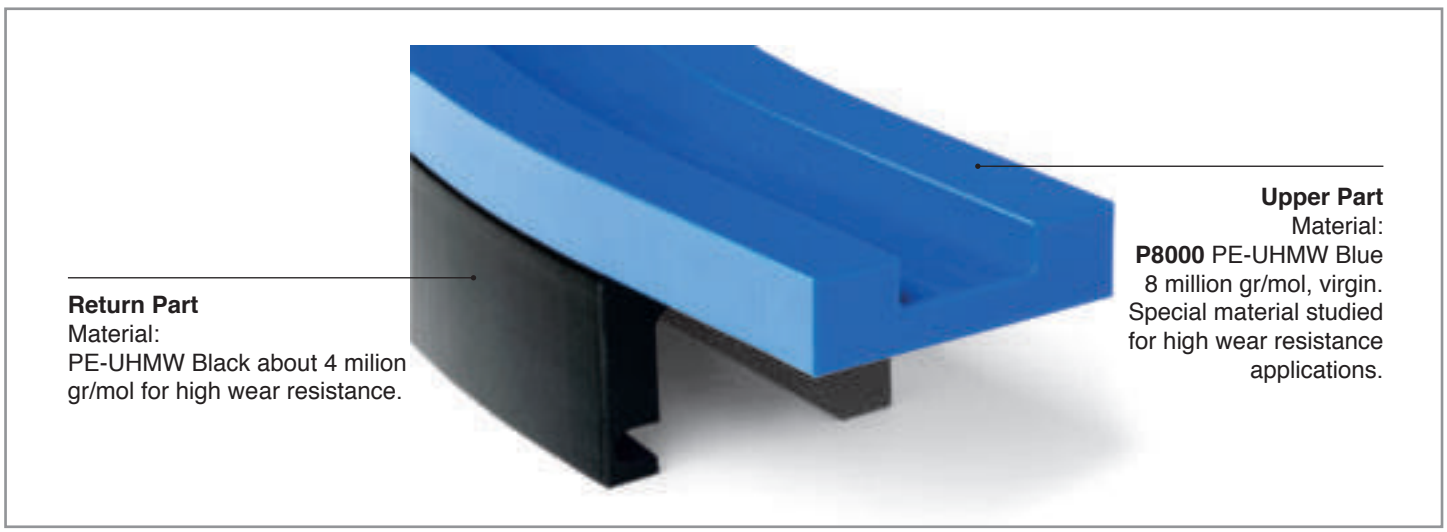

P8000 - special compound of PE-UHMW

BENEFITS & FEATURES

- Special material for very high speed applications.
- Extremely low coefficient of friction.
- Reduced chain pull. Reduced noice and squeaking.
- Reduced the consumption of energy.

** Worldwide no restrictions for Magris magnetic curves used with stainless steel chains.
** Some restrictions in specific countries for Magris magnetic curves used with thermoplastic chains.
Please contact our Customer Service for more details.

Adeptrans Cadenas y Transmisiones S.L.

Corner Tracks ED01

MakesMoving

916 926 286 · info@adeptrans.es

magnetic corner tracks

SELECTION TABLES

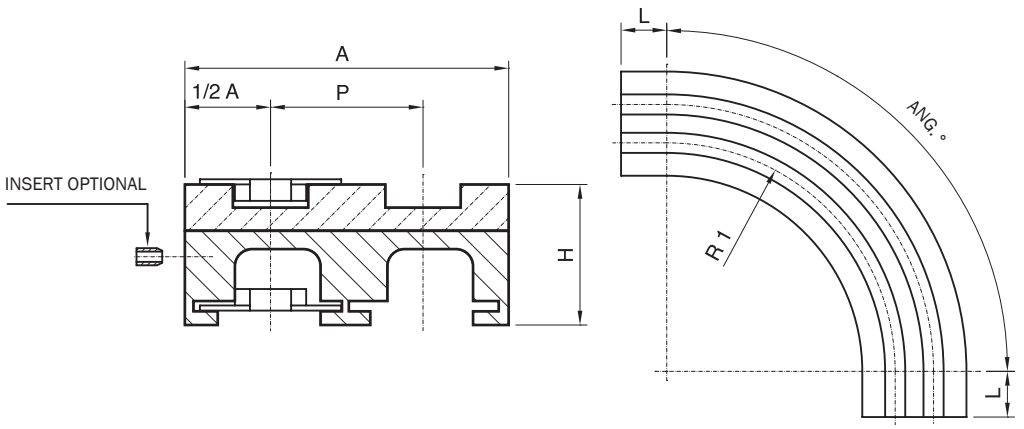

SELECTION TABLES

Chains			Radius	Pitch	Basic Width	Infeed Length	Total Height	Version	Page
chains ref.	thickness	hinge	**R**	**P**	**A**	**L**	**H**		
for Chains with K325 - K330 Plate Width									
879 M K325 880 M K325 880 M K330 8811 M K325 8811 M K330 581 M K325	3 - 4	42,1	500	85	100	0	82 / 90	CM07	108
						100	90	CM06	108
					110			CM10	109
					111			CM04	109
								CM14	110
				89	100	125	82	CM01	110
				90		100		CM02	111
					110	0		CM03	111
			590	180	100	100		CM05B	112
			680	-				CM05A	112
			750	85			82 / 90	CM08	113
					111		90	CM42	113
				90	110		82	CM09	114
			860	-	100	125		CM05C	114
			1000			0		CM05D	115
				85	111	100	90	CM43	115
for Chains with K325 - K450 Plate Width									
661 M K325 661 M K330	3	42,2	500	85	100	100	82	CMF06	116
879 M K450 880 M K450 8811 M K450	3 - 4	42,1		120	129	125	90	CM21A	116
			610					CM22A	117
				117		0		CM27	117

selection tables

SELECTION TABLES									
Chains			Radius R	Pitch P	Basic Width A	Infeed Length L	Total Height H	Version	Page
chains ref.	thickness	hinge							
for Chains with K750 - Plate Width									
880 M K750 8811 M K750	3 - 4	42,1	500	192	214	0	90	CM60	118
			610	196		125		CM61	118
			750	-		0	82	CM62	119
			860					CM66	119
			1000					CM65	120
8817 M K750 8817 M G K750 882 M K750	3 - 4,8	42,1 56,6 57	610	195	200	100	95	CM81	120
			750				87 / 95	CM85	121
			860	-	214	0	87	CM86	121
			1000	195	200	100	87 / 95	CM80	122
for Chains with K1000 - Plate Width									
882 M K1000	4,8	56,6	860	-	290	0	87	CM91	122
					270		95	CM93	123
			1000					CM94	123
for Chains with K1200 - Plate Width									
882 M K1200	4,8	56,6	860	-	340	0	87	CM96	124
					320		95	CM97	124
			1000					CM98	125
for LBP Chains Series									
LBP 879 M K325	4,8	56,6	500	85	100	0	82 / 102	CMP68C	125
LBP 882 M K325				90		100	90	CMP02	126
LBP 882 M K750			860	-	214	0	95	CMP861	126
				200				CMP86C	127
LBP 882 M K1000				-	270			CMP93C	127
					290			CMP91	128
			1000		270			CMP94C	128
LBP 882 M K1200			860		320			CMP97C	129
					340			CMP96	129
			1000		320			CMP98C	130
for 780M - 790M - Chains Series									
780 M K330	8,7	42,1	500	85	100	100	90	CMB06	130
						0	82 / 90	CMB07	131
					111	100	90	CMB04	131
			750		100			CMB08	132
			1000			0		CMB05D	132
780 M K450			500	117	129	100		CMB22	133
			610					CMB27	133
790 M K330	12,7		500	85	100			CMC06	134
						0	82 / 90	CMC07	134
					111	100	90	CMC04	135
			750		100			CMC08	135
			1000			0		CMC05D	136
790 M K450			500	120	129	125		CMC21	136
				117		100		CMC22	137
			610					CMC27	137
RETURN GUIDE SHOES: INSTALLATION									138

magnetic corner tracks

VERSION CM07 / CM06

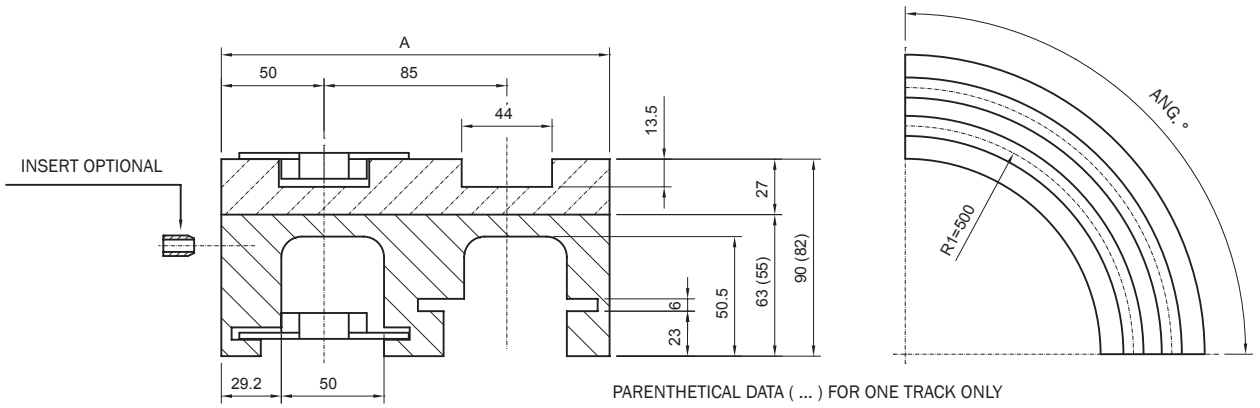

VERSION CM07								CHAINS REF.
Nr. of Tracks	A	Curve angle 15°	Curve angle 30°	Curve angle 45°	Curve angle 60°	Curve angle 75°	Curve angle 90°	879 M K325
1	100	CM07 01 15	CM07 01 30	CM07 01 45	CM07 01 60	CM07 01 75	CM07 01 90	880 M K325
2	185	CM07 02 15	CM07 02 30	CM07 02 45	CM07 02 60	CM07 02 75	CM07 02 90	880 M K330
3	270	CM07 03 15	CM07 03 30	CM07 03 45	CM07 03 60	CM07 03 75	CM07 03 90	8811 M K325
4	355	CM07 04 15	CM07 04 30	CM07 04 45	CM07 04 60	CM07 04 75	CM07 04 90	8811 M K330
5	440	CM07 05 15	CM07 05 30	CM07 05 45	CM07 05 60	CM07 05 75	CM07 05 90	581 M K325
6	525	CM07 06 15	CM07 06 30	CM07 06 45	CM07 06 60	CM07 06 75	CM07 06 90	
7	610	CM07 07 15	CM07 07 30	CM07 07 45	CM07 07 60	CM07 07 75	CM07 07 90	

More than 7 tracks on request.

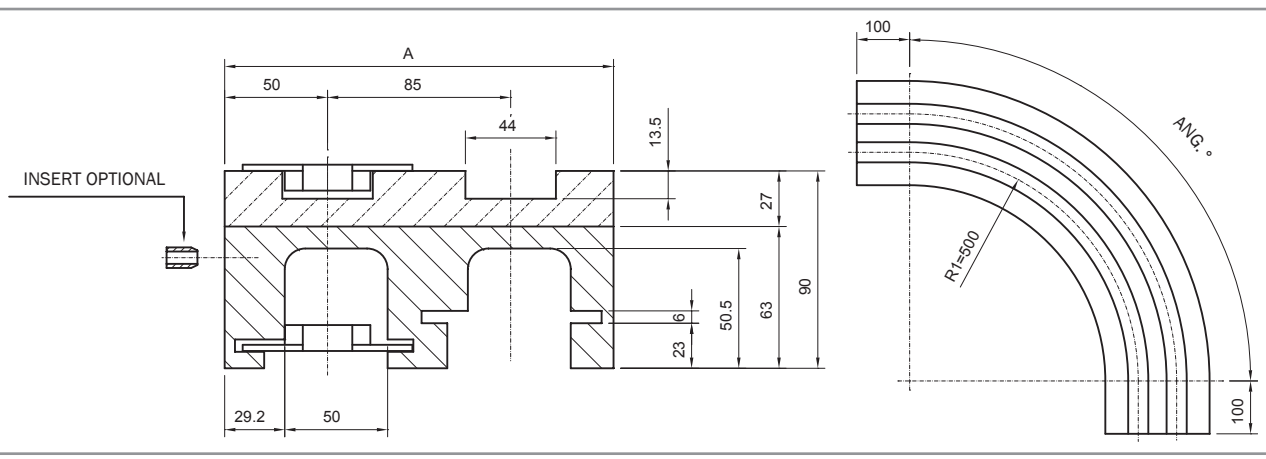

VERSION CM06								CHAINS REF.
Nr. of Tracks	A	Curve angle 15°	Curve angle 30°	Curve angle 45°	Curve angle 60°	Curve angle 75°	Curve angle 90°	879 M K325
1	100	CM06 01 15	CM06 01 30	CM06 01 45	CM06 01 60	CM06 01 75	CM06 01 90	880 M K325
2	185	CM06 02 15	CM06 02 30	CM06 02 45	CM06 02 60	CM06 02 75	CM06 02 90	880 M K330
3	270	CM06 03 15	CM06 03 30	CM06 03 45	CM06 03 60	CM06 03 75	CM06 03 90	8811 M K325
4	355	CM06 04 15	CM06 04 30	CM06 04 45	CM06 04 60	CM06 04 75	CM06 04 90	8811 M K330
5	440	CM06 05 15	CM06 05 30	CM06 05 45	CM06 05 60	CM06 05 75	CM06 05 90	581 M K325
6	525	CM06 06 15	CM06 06 30	CM06 06 45	CM06 06 60	CM06 06 75	CM06 06 90	
7	610	CM06 07 15	CM06 07 30	CM06 07 45	CM06 07 60	CM06 07 75	CM06 07 90	

More than 7 tracks on request.

magnetic corner tracks

VERSION CM10 / CM04

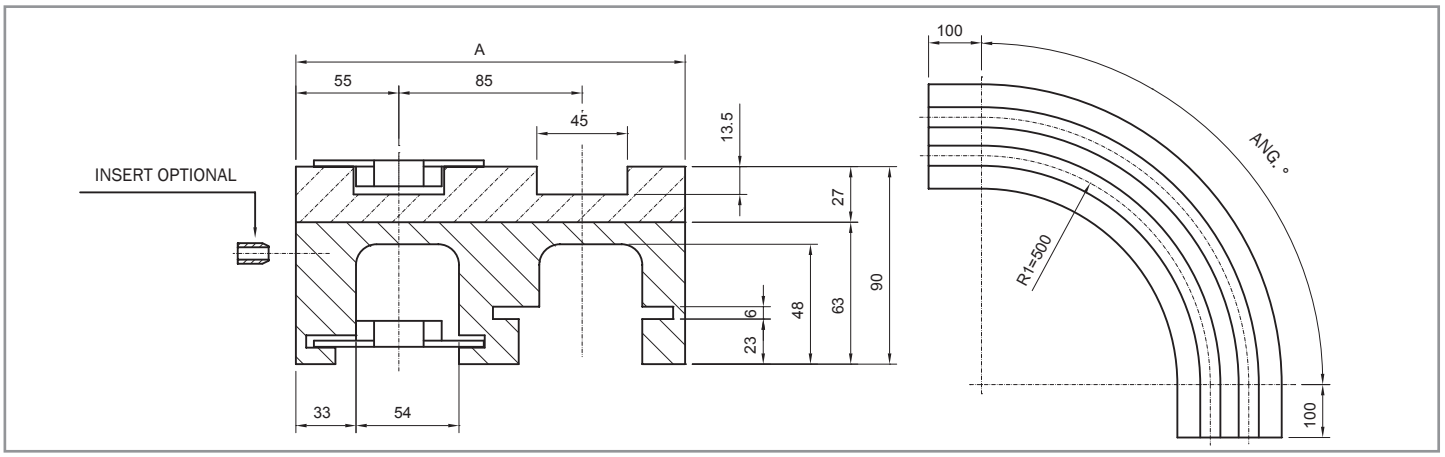

VERSION CM10								CHAINS REF.
Nr. of Tracks	A	Curve angle 15°	Curve angle 30°	Curve angle 45°	Curve angle 60°	Curve angle 75°	Curve angle 90°	879 M K325
1	100	CM10 01 15	CM10 01 30	CM10 01 45	CM10 01 60	CM10 01 75	CM10 01 90	880 M K325
2	195	CM10 02 15	CM10 02 30	CM10 02 45	CM10 02 60	CM10 02 75	CM10 02 90	880 M K330
3	280	CM10 03 15	CM10 03 30	CM10 03 45	CM10 03 60	CM10 03 75	CM10 03 90	8811 M K325
4	365	CM10 04 15	CM10 04 30	CM10 04 45	CM10 04 60	CM10 04 75	CM10 04 90	8811 M K330
5	450	CM10 05 15	CM10 05 30	CM10 05 45	CM10 05 60	CM10 05 75	CM10 05 90	581 M K325
6	535	CM10 06 15	CM10 06 30	CM10 06 45	CM10 06 60	CM10 06 75	CM10 06 90	
7	620	CM10 07 15	CM10 07 30	CM10 07 45	CM10 07 60	CM10 07 75	CM10 07 90	
8	705	CM10 08 15	CM10 08 30	CM10 08 45	CM10 08 60	CM10 08 75	CM10 08 90	

More than 8 tracks on request.

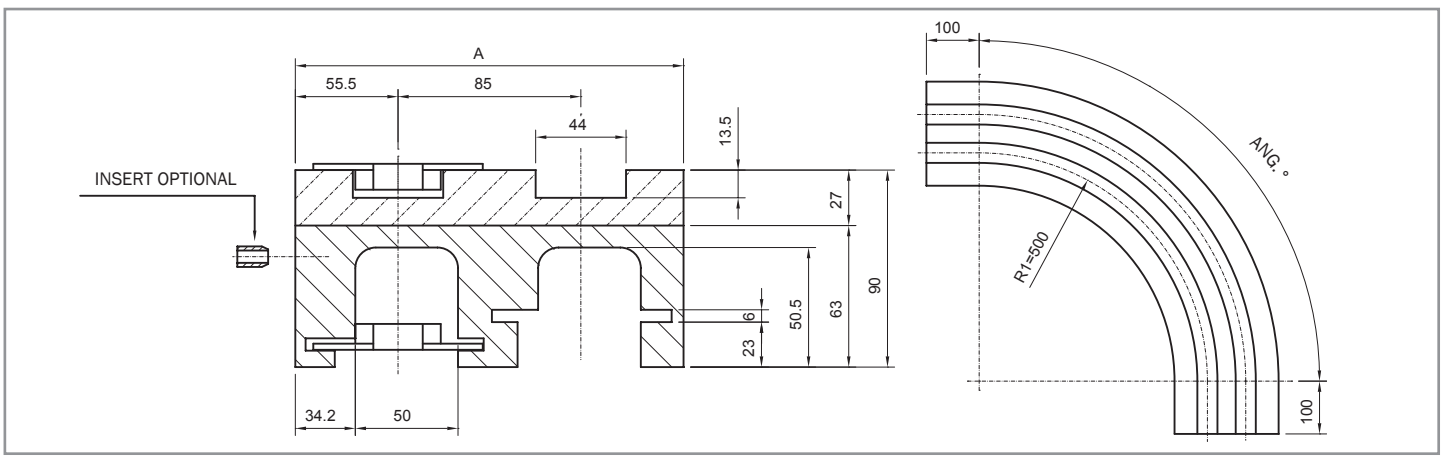

VERSION CM04								CHAINS REF.
Nr. of Tracks	A	Curve angle 15°	Curve angle 30°	Curve angle 45°	Curve angle 60°	Curve angle 75°	Curve angle 90°	879 M K325
1	111	CM04 01 15	CM04 01 30	CM04 01 45	CM04 01 60	CM04 01 75	CM04 01 90	880 M K325
2	196	CM04 02 15	CM04 02 30	CM04 02 45	CM04 02 60	CM04 02 75	CM04 02 90	880 M K330
3	281	CM04 03 15	CM04 03 30	CM04 03 45	CM04 03 60	CM04 03 75	CM04 03 90	8811 M K325
4	366	CM04 04 15	CM04 04 30	CM04 04 45	CM04 04 60	CM04 04 75	CM04 04 90	8811 M K330
5	451	CM04 05 15	CM04 05 30	CM04 05 45	CM04 05 60	CM04 05 75	CM04 05 90	581 M K325
6	536	CM04 06 15	CM04 06 30	CM04 06 45	CM04 06 60	CM04 06 75	CM04 06 90	
7	621	CM04 07 15	CM04 07 30	CM04 07 45	CM04 07 60	CM04 07 75	CM04 07 90	

More than 7 tracks on request.

magnetic corner tracks

VERSION CM14 / CM01

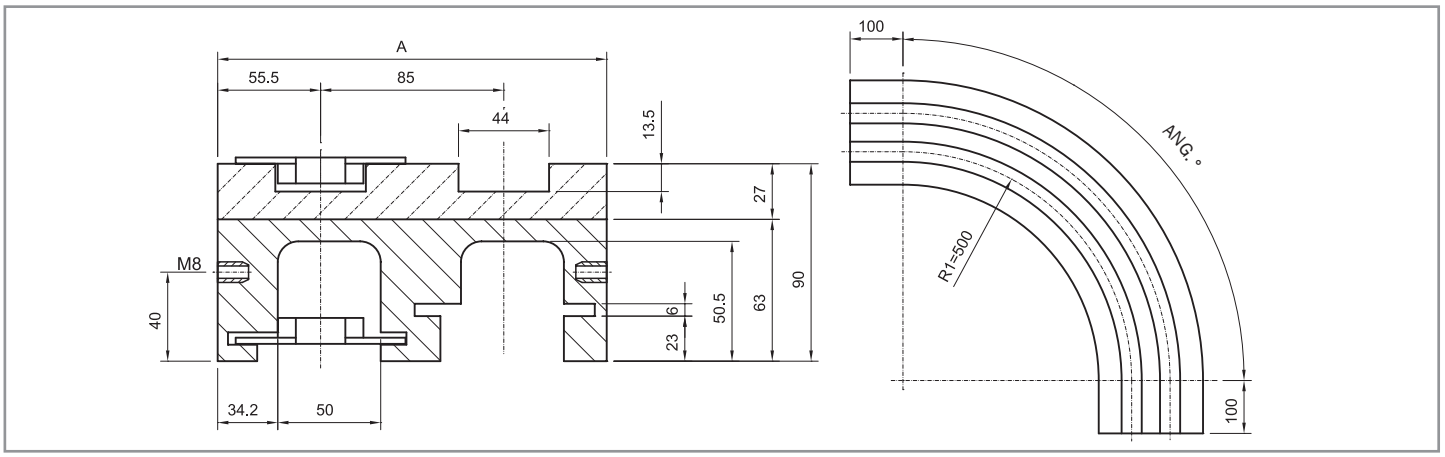

VERSION CM14							
Nr. of Tracks	A	Curve angle 15°	Curve angle 30°	Curve angle 45°	Curve angle 60°	Curve angle 75°	Curve angle 90°
1	111	CM14 01 15	CM14 01 30	CM14 01 45	CM14 01 60	CM14 01 75	CM14 01 90
2	196	CM14 02 15	CM14 02 30	CM14 02 45	CM14 02 60	CM14 02 75	CM14 02 90
3	281	CM14 03 15	CM14 03 30	CM14 03 45	CM14 03 60	CM14 03 75	CM14 03 90
4	366	CM14 04 15	CM14 04 30	CM14 04 45	CM14 04 60	CM14 04 75	CM14 04 90
5	451	CM14 05 15	CM14 05 30	CM14 05 45	CM14 05 60	CM14 05 75	CM14 05 90
6	536	CM14 06 15	CM14 06 30	CM14 06 45	CM14 06 60	CM14 06 75	CM14 06 90
7	621	CM14 07 15	CM14 07 30	CM14 07 45	CM14 07 60	CM14 07 75	CM14 07 90

CHAINS REF.
879 M K325
880 M K325
880 M K330
8811 M K325
8811 M K330
581 M K325

More than 7 tracks on request. Include inserts, of which the pattern varies per angle.

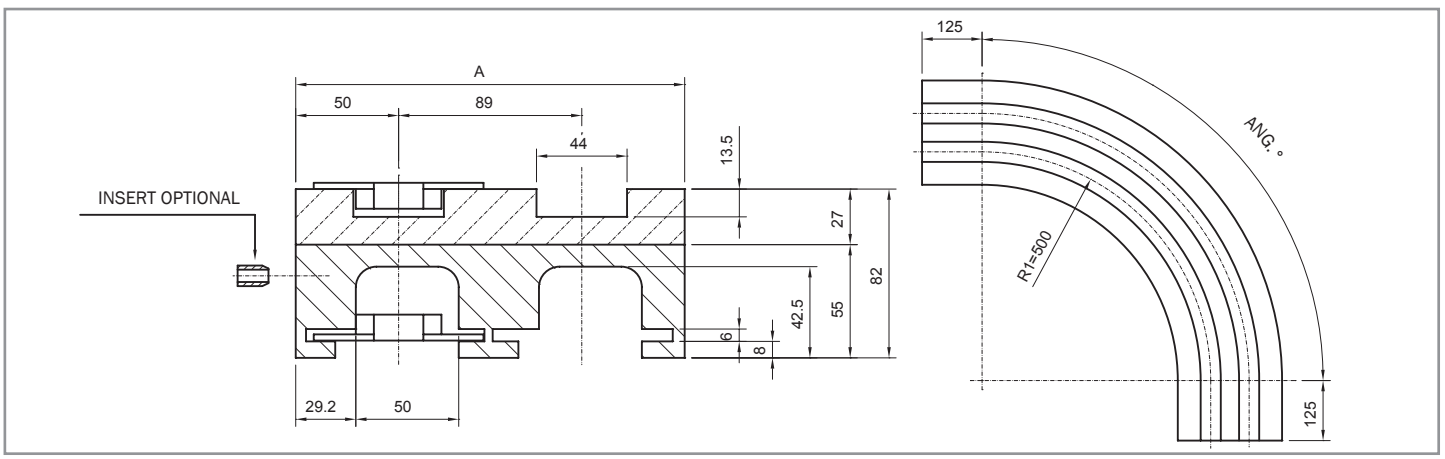

VERSION CM01							
Nr. of Tracks	A	Curve angle 15°	Curve angle 30°	Curve angle 45°	Curve angle 60°	Curve angle 75°	Curve angle 90°
1	100	CM01 01 15	CM01 01 30	CM01 01 45	CM01 01 60	CM01 01 75	CM01 01 90
2	189	CM01 02 15	CM01 02 30	CM01 02 45	CM01 02 60	CM01 02 75	CM01 02 90
3	278	CM01 03 15	CM01 03 30	CM01 03 45	CM01 03 60	CM01 03 75	CM01 03 90
4	367	CM01 04 15	CM01 04 30	CM01 04 45	CM01 04 60	CM01 04 75	CM01 04 90
5	456	CM01 05 15	CM01 05 30	CM01 05 45	CM01 05 60	CM01 05 75	CM01 05 90
6	545	CM01 06 15	CM01 06 30	CM01 06 45	CM01 06 60	CM01 06 75	CM01 06 90
7	634	CM01 07 15	CM01 07 30	CM01 07 45	CM01 07 60	CM01 07 75	CM01 07 90

CHAINS REF.
879 M K325
880 M K325
880 M K330
8811 M K325
8811 M K330
581 M K325

More than 7 tracks on request.

magnetic corner tracks

VERSION CM02 / CM03

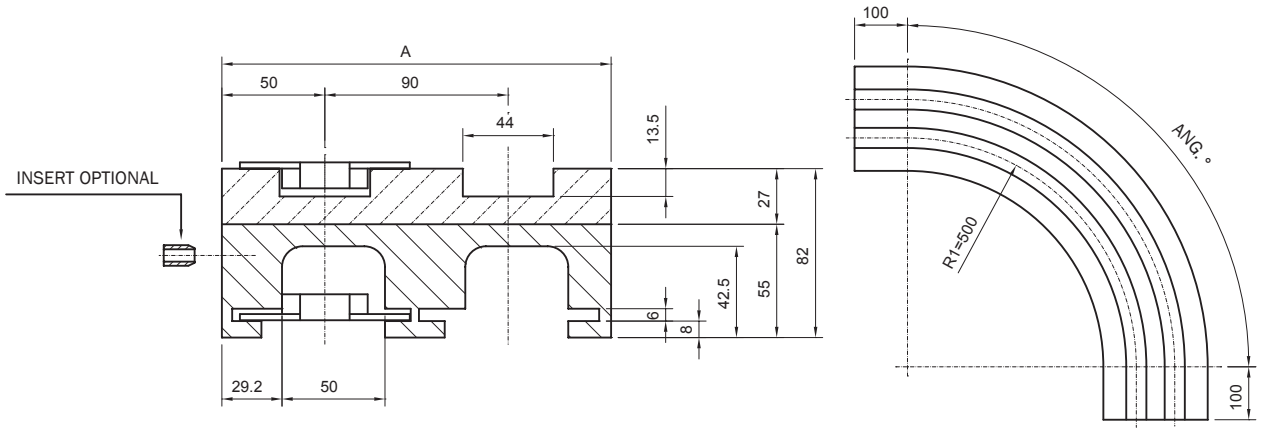

VERSION CM02							
Nr. of Tracks	A	Curve angle 15°	Curve angle 30°	Curve angle 45°	Curve angle 60°	Curve angle 75°	Curve angle 90°
1	100	CM02 01 15	CM02 01 30	CM02 01 45	CM02 01 60	CM02 01 75	CM02 01 90
2	190	CM02 02 15	CM02 02 30	CM02 02 45	CM02 02 60	CM02 02 75	CM02 02 90
3	280	CM02 03 15	CM02 03 30	CM02 03 45	CM02 03 60	CM02 03 75	CM02 03 90
4	370	CM02 04 15	CM02 04 30	CM02 04 45	CM02 04 60	CM02 04 75	CM02 04 90
5	460	CM02 05 15	CM02 05 30	CM02 05 45	CM02 05 60	CM02 05 75	CM02 05 90
6	550	CM02 06 15	CM02 06 30	CM02 06 45	CM02 06 60	CM02 06 75	CM02 06 90
7	640	CM02 07 15	CM02 07 30	CM02 07 45	CM02 07 60	CM02 07 75	CM02 07 90

CHAINS REF.
879 M K325
880 M K325
880 M K330
8811 M K325
8811 M K330
581 M K325

More than 7 tracks on request.

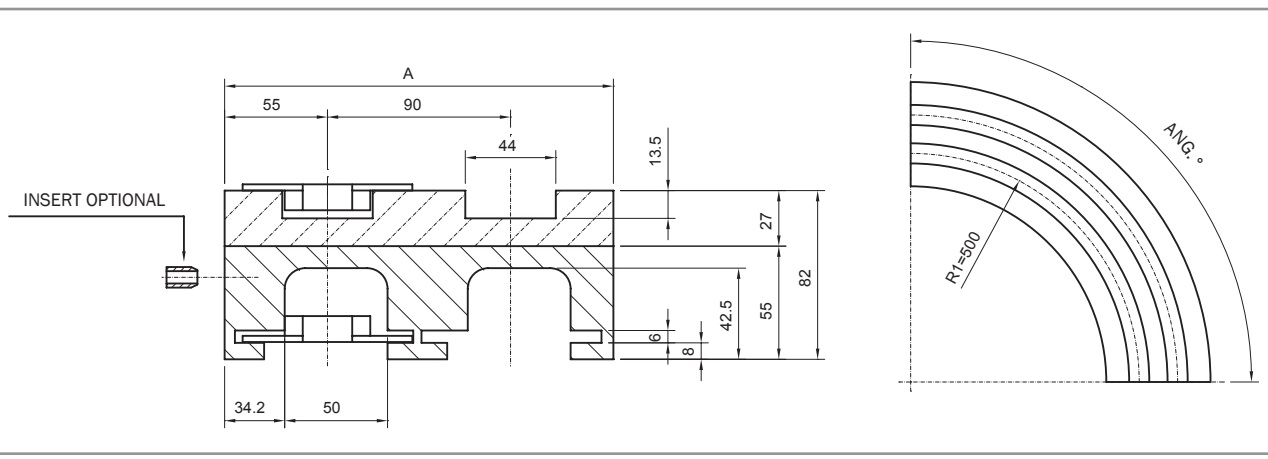

VERSION CM03							
Nr. of Tracks	A	Curve angle 15°	Curve angle 30°	Curve angle 45°	Curve angle 60°	Curve angle 75°	Curve angle 90°
1	110	CM03 01 15	CM03 01 30	CM03 01 45	CM03 01 60	CM03 01 75	CM03 01 90
2	200	CM03 02 15	CM03 02 30	CM03 02 45	CM03 02 60	CM03 02 75	CM03 02 90
3	290	CM03 03 15	CM03 03 30	CM03 03 45	CM03 03 60	CM03 03 75	CM03 03 90
4	380	CM03 04 15	CM03 04 30	CM03 04 45	CM03 04 60	CM03 04 75	CM03 04 90
5	470	CM03 05 15	CM03 05 30	CM03 05 45	CM03 05 60	CM03 05 75	CM03 05 90
6	560	CM03 06 15	CM03 06 30	CM03 06 45	CM03 06 60	CM03 06 75	CM03 06 90
7	650	CM03 07 15	CM03 07 30	CM03 07 45	CM03 07 60	CM03 07 75	CM03 07 90

CHAINS REF.
879 M K325
880 M K325
880 M K330
8811 M K325
8811 M K330
581 M K325

More than 7 tracks on request.

magnetic corner tracks

VERSION CM05B / CM05A

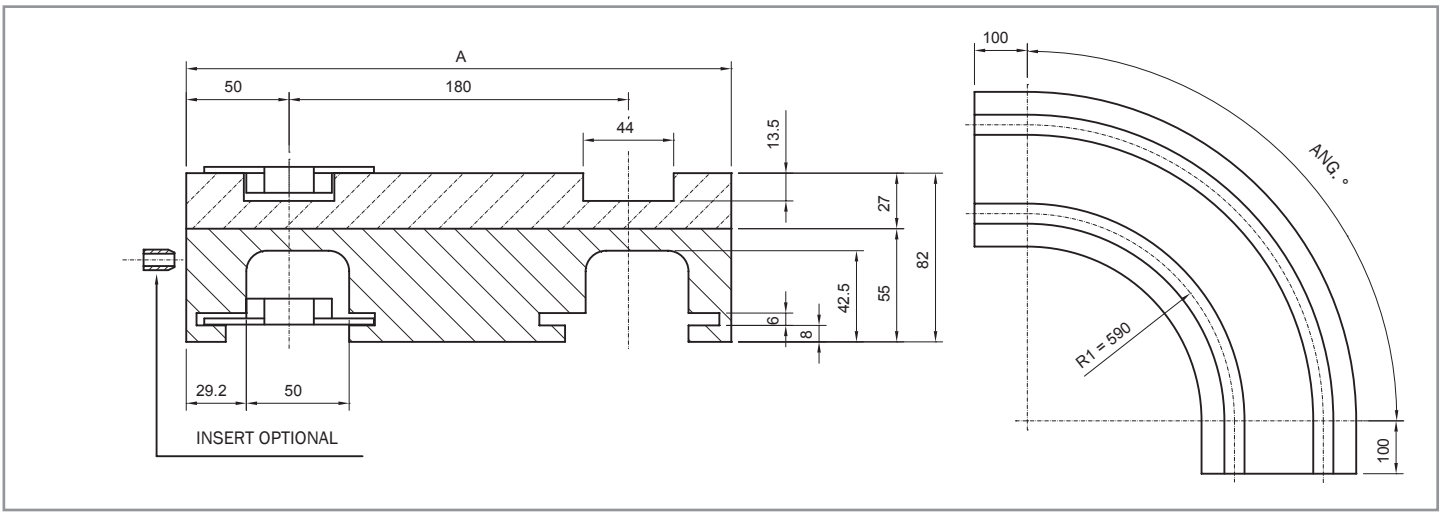

VERSION CM05B								CHAINS REF.
Nr. of Tracks	A	Curve angle 15°	Curve angle 30°	Curve angle 45°	Curve angle 60°	Curve angle 75°	Curve angle 90°	879 M K325
2	280	CM05B 02 15	CM05B 02 30	CM05B 02 45	CM05B 02 60	CM05B 02 75	CM05B 02 90	880 M K325
								880 M K330
								8811 M K325
								8811 M K330
								581 M K325

Special twin-track design for crate conveyors.

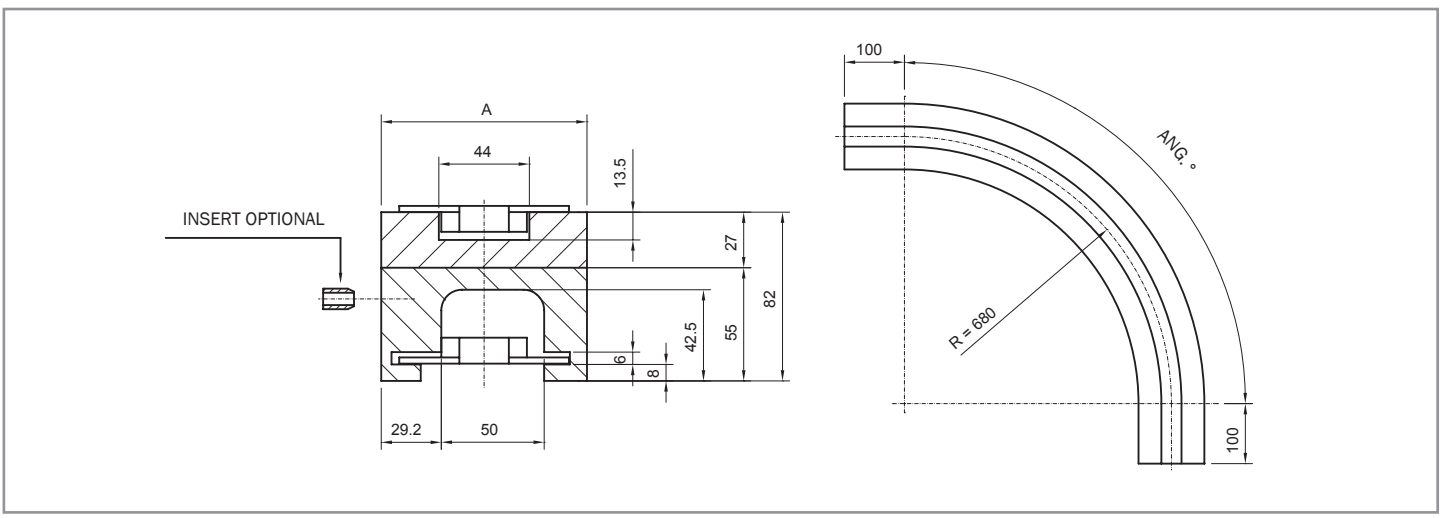

VERSION CM05A								CHAINS REF.
Nr. of Tracks	A	Curve angle 15°	Curve angle 30°	Curve angle 45°	Curve angle 60°	Curve angle 75°	Curve angle 90°	879 M K325
1	100	CM05A 01 15	CM05A 01 30	CM05A 01 45	CM05A 01 60	CM05A 01 75	CM05A 01 90	880 M K325
								880 M K330
								8811 M K325
								8811 M K330
								581 M K325

More than 1 track on request.

magnetic corner tracks

VERSION CM08 / CM42

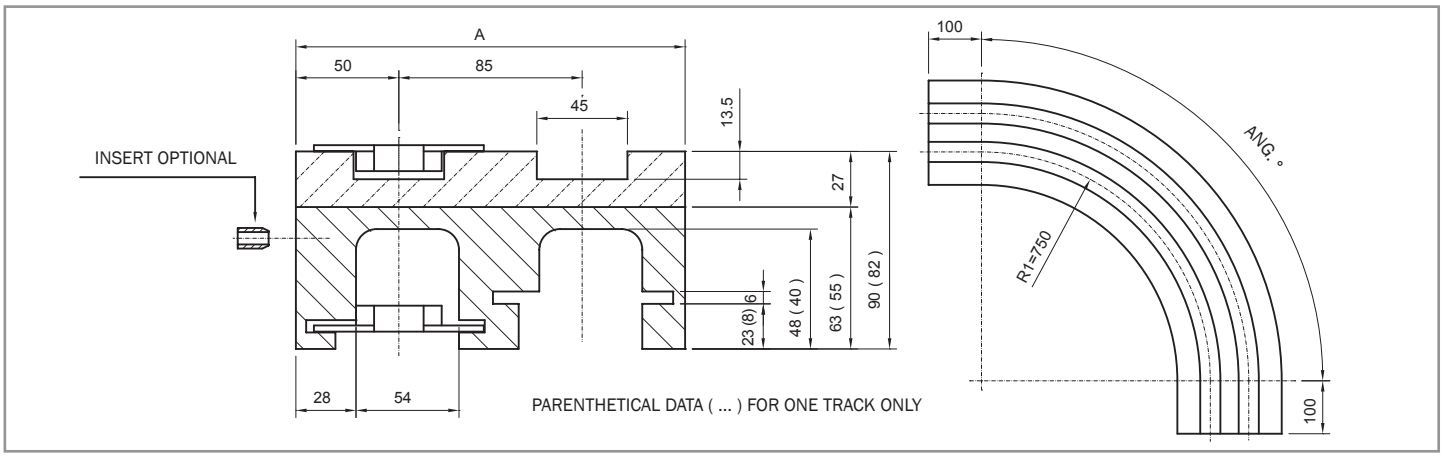

VERSION CM08								CHAINS REF.
Nr. of Tracks	A	Curve angle 15°	Curve angle 30°	Curve angle 45°	Curve angle 60°	Curve angle 75°	Curve angle 90°	879 M K325
1	100	CM08 01 15	CM08 01 30	CM08 01 45	CM08 01 60	CM08 01 75	CM08 01 90	880 M K325
2	185	CM08 02 15	CM08 02 30	CM08 02 45	CM08 02 60	CM08 02 75	CM08 02 90	880 M K330
3	270	CM08 03 15	CM08 03 30	CM08 03 45	CM08 03 60	CM08 03 75	CM08 03 90	8811 M K325
4	355	CM08 04 15	CM08 04 30	CM08 04 45	CM08 04 60	CM08 04 75	CM08 04 90	8811 M K330
5	440	CM08 05 15	CM08 05 30	CM08 05 45	CM08 05 60	CM08 05 75	CM08 05 90	581 M K325
6	525	CM08 06 15	CM08 06 30	CM08 06 45	CM08 06 60	CM08 06 75	CM08 06 90	
7	610	CM08 07 15	CM08 07 30	CM08 07 45	CM08 07 60	CM08 07 75	CM08 07 90	
8	695	CM08 08 15	CM08 08 30	CM08 08 45	CM08 08 60	CM08 08 75	CM08 08 90	

More than 8 tracks on request.

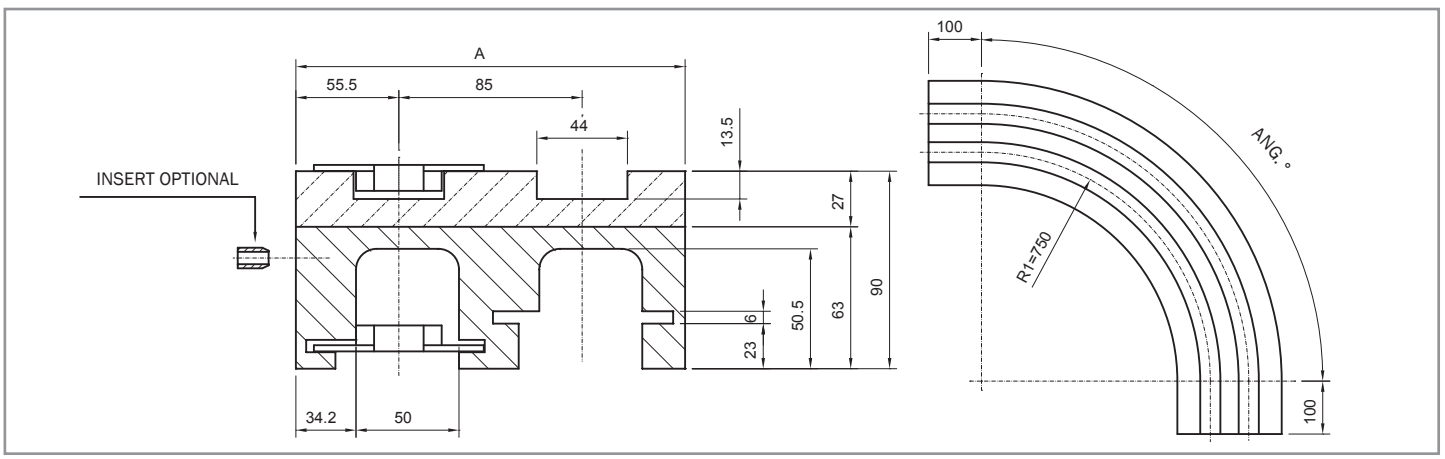

VERSION CM42								CHAINS REF.
Nr. of Tracks	A	Curve angle 15°	Curve angle 30°	Curve angle 45°	Curve angle 60°	Curve angle 75°	Curve angle 90°	879 M K325
1	111	CM42 01 15	CM42 01 30	CM42 01 45	CM42 01 60	CM42 01 75	CM42 01 90	880 M K325
2	196	CM42 02 15	CM42 02 30	CM42 02 45	CM42 02 60	CM42 02 75	CM42 02 90	880 M K330
3	281	CM42 03 15	CM42 03 30	CM42 03 45	CM42 03 60	CM42 03 75	CM42 03 90	8811 M K325
4	366	CM42 04 15	CM42 04 30	CM42 04 45	CM42 04 60	CM42 04 75	CM42 04 90	8811 M K330
5	451	CM42 05 15	CM42 05 30	CM42 05 45	CM42 05 60	CM42 05 75	CM42 05 90	581 M K325
6	536	CM42 06 15	CM42 06 30	CM42 06 45	CM42 06 60	CM42 06 75	CM42 06 90	
7	621	CM42 07 15	CM42 07 30	CM42 07 45	CM42 07 60	CM42 07 75	CM42 07 90	

More than 7 tracks on request.

magnetic corner tracks

VERSION CM09 / CM05C

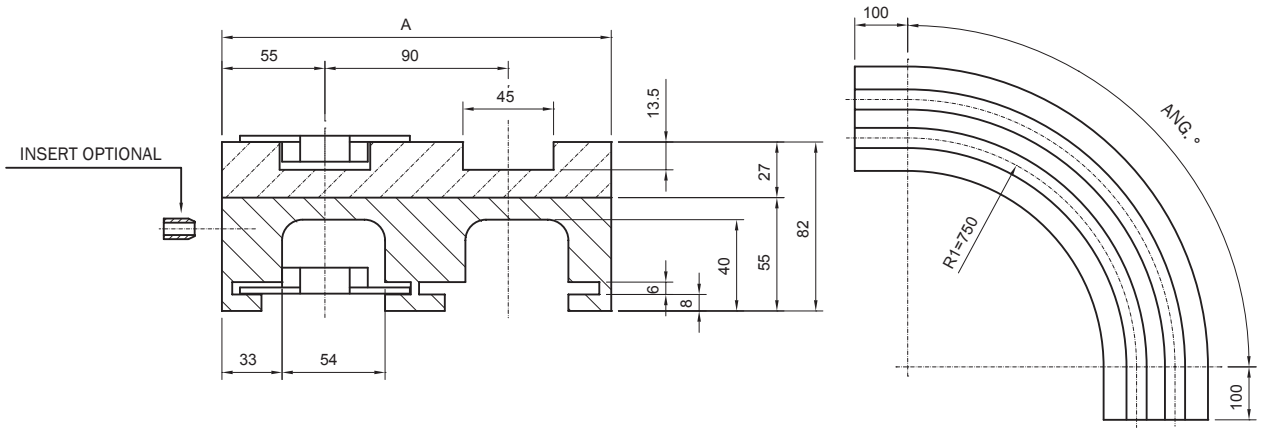

VERSION CM09							
Nr. of Tracks	A	Curve angle 15°	Curve angle 30°	Curve angle 45°	Curve angle 60°	Curve angle 75°	Curve angle 90°
1	110	CM09 01 15	CM09 01 30	CM09 01 45	CM09 01 60	CM09 01 75	CM09 01 90
2	200	CM09 02 15	CM09 02 30	CM09 02 45	CM09 02 60	CM09 02 75	CM09 02 90
3	290	CM09 03 15	CM09 03 30	CM09 03 45	CM09 03 60	CM09 03 75	CM09 03 90
4	380	CM09 04 15	CM09 04 30	CM09 04 45	CM09 04 60	CM09 04 75	CM09 04 90
5	470	CM09 05 15	CM09 05 30	CM09 05 45	CM09 05 60	CM09 05 75	CM09 05 90
6	560	CM09 06 15	CM09 06 30	CM09 06 45	CM09 06 60	CM09 06 75	CM09 06 90
7	650	CM09 07 15	CM09 07 30	CM09 07 45	CM09 07 60	CM09 07 75	CM09 07 90
8	740	CM09 08 15	CM09 08 30	CM09 08 45	CM09 08 60	CM09 08 75	CM09 08 90

CHAINS REF.
879 M K325
880 M K325
880 M K330
8811 M K325
8811 M K330
581 M K325

More than 8 tracks on request.

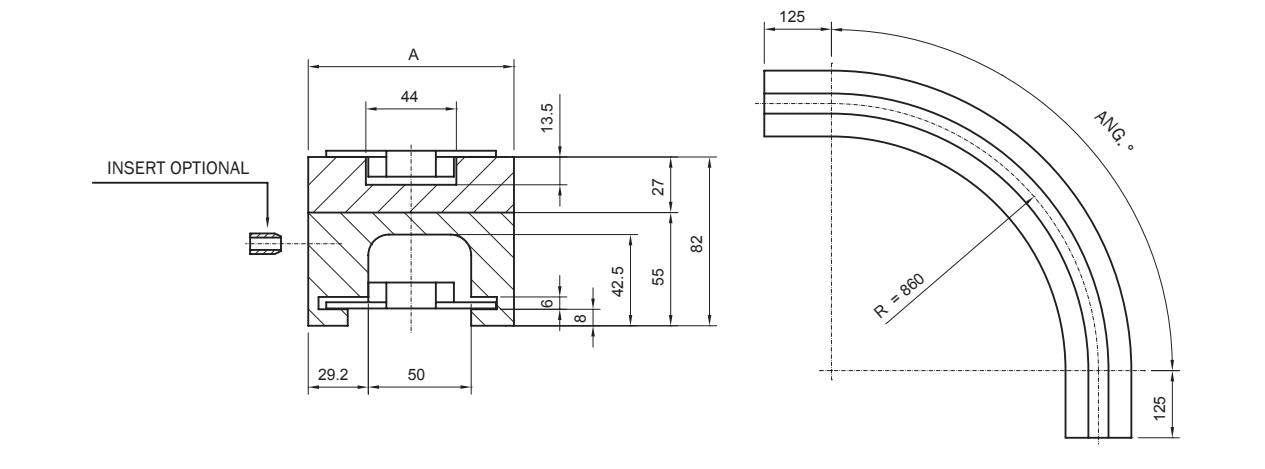

VERSION CM05C							
Nr. of Tracks	A	Curve angle 15°	Curve angle 30°	Curve angle 45°	Curve angle 60°	Curve angle 75°	Curve angle 90°
1	100	CM05C 01 15	CM05C 01 30	CM05C 01 45	CM05C 01 60	CM05C 01 75	CM05C 01 90

CHAINS REF.
879 M K325
880 M K325
880 M K330
8811 M K325
8811 M K330
581 M K325

More than 1 track on request.

magnetic corner tracks

VERSION CM05D / CM43

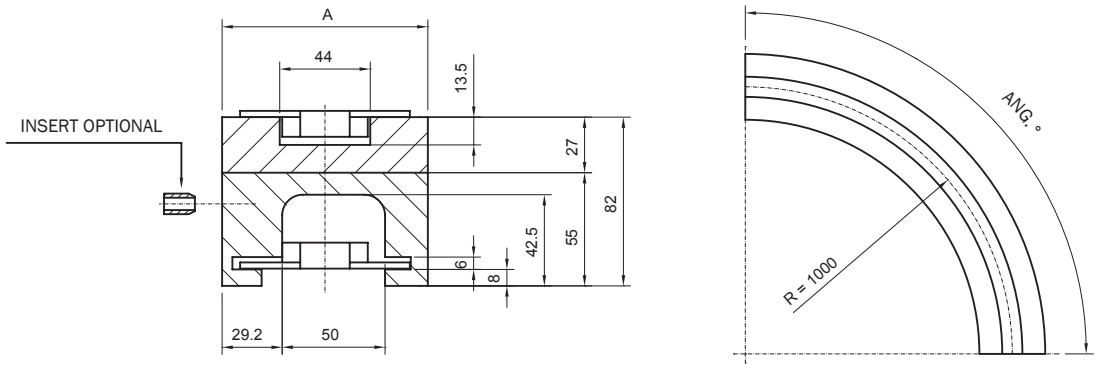

VERSION CM05D							
Nr. of Tracks	A	Curve angle 15°	Curve angle 30°	Curve angle 45°	Curve angle 60°	Curve angle 75°	Curve angle 90°
1	100	CM05D 01 15	CM05D 01 30	CM05D 01 45	CM05D 01 60	CM05D 01 75	CM05D 01 90

More than 1 track on request.

CHAINS REF.
879 M K325
880 M K325
880 M K330
8811 M K325
8811 M K330
581 M K325

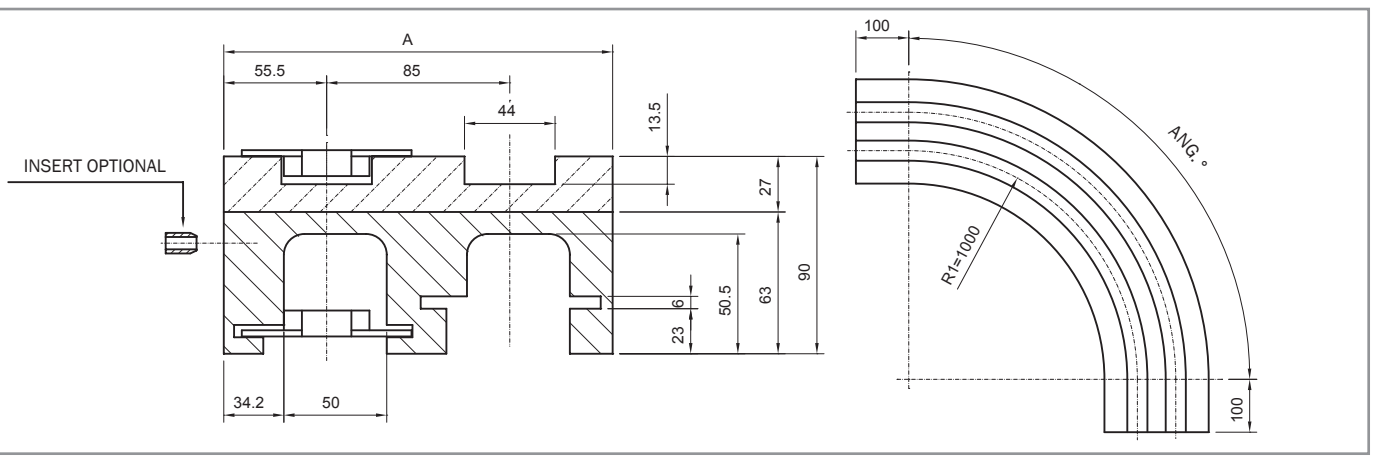

VERSION CM43							
Nr. of Tracks	A	Curve angle 15°	Curve angle 30°	Curve angle 45°	Curve angle 60°	Curve angle 75°	Curve angle 90°
1	111	CM43 01 15	CM43 01 30	CM43 01 45	CM43 01 60	CM43 01 75	CM43 01 90
2	196	CM43 02 15	CM43 02 30	CM43 02 45	CM43 02 60	CM43 02 75	CM43 02 90
3	281	CM43 03 15	CM43 03 30	CM43 03 45	CM43 03 60	CM43 03 75	CM43 03 90
4	366	CM43 04 15	CM43 04 30	CM43 04 45	CM43 04 60	CM43 04 75	CM43 04 90
5	451	CM43 05 15	CM43 05 30	CM43 05 45	CM43 05 60	CM43 05 75	CM43 05 90
6	536	CM43 06 15	CM43 06 30	CM43 06 45	CM43 06 60	CM43 06 75	CM43 06 90
7	621	CM43 07 15	CM43 07 30	CM43 07 45	CM43 07 60	CM43 07 75	CM43 07 90

CHAINS REF.
879 M K325
880 M K325
880 M K330
8811 M K325
8811 M K330
581 M K325

More than 7 tracks on request.

magnetic corner tracks

VERSION CMF06 / CM21A

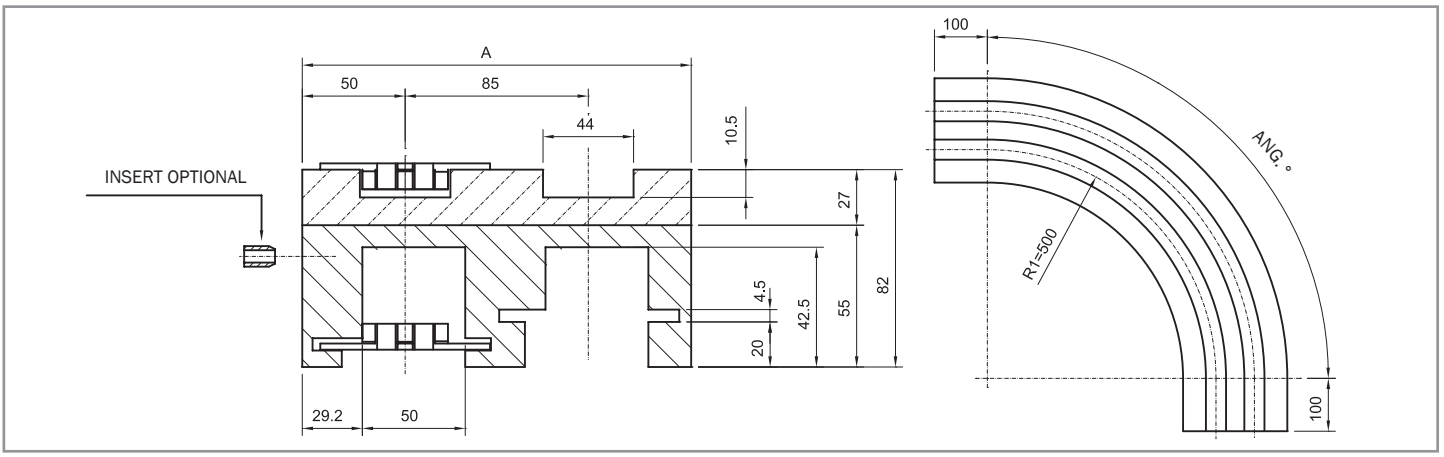

VERSION CMF06								CHAINS REF.
Nr. of Tracks	A	Curve angle 15°	Curve angle 30°	Curve angle 45°	Curve angle 60°	Curve angle 75°	Curve angle 90°	661 M K325 661 M K330
1	100	CMF06 01 15	CMF06 01 30	CMF06 01 45	CMF06 01 60	CMF06 01 75	CMF06 01 90	
2	185	CMF06 02 15	CMF06 02 30	CMF06 02 45	CMF06 02 60	CMF06 02 75	CMF06 02 90	
3	270	CMF06 03 15	CMF06 03 30	CMF06 03 45	CMF06 03 60	CMF06 03 75	CMF06 03 90	
4	355	CMF06 04 15	CMF06 04 30	CMF06 04 45	CMF06 04 60	CMF06 04 75	CMF06 04 90	
5	440	CMF06 05 15	CMF06 05 30	CMF06 05 45	CMF06 05 60	CMF06 05 75	CMF06 05 90	
6	525	CMF06 06 15	CMF06 06 30	CMF06 06 45	CMF06 06 60	CMF06 06 75	CMF06 06 90	
7	610	CMF06 07 15	CMF06 07 30	CMF06 07 45	CMF06 07 60	CMF06 07 75	CMF06 07 90	

More than 7 tracks on request.

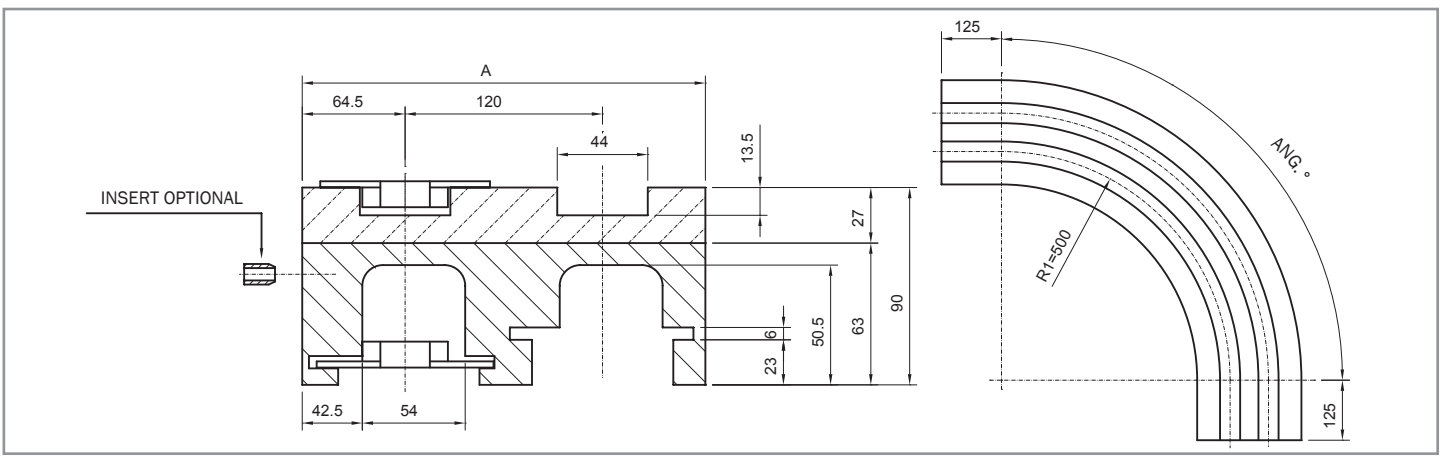

VERSION CM21A								CHAINS REF.
Nr. of Tracks	A	Curve angle 15°	Curve angle 30°	Curve angle 45°	Curve angle 60°	Curve angle 75°	Curve angle 90°	879 M K450 880 M K450 8811 M K450
1	129	CM21A 01 15	CM21A 01 30	CM21A 01 45	CM21A 01 60	CM21A 01 75	CM21A 01 90	
2	249	CM21A 02 15	CM21A 02 30	CM21A 02 45	CM21A 02 60	CM21A 02 75	CM21A 02 90	
3	369	CM21A 03 15	CM21A 03 30	CM21A 03 45	CM21A 03 60	CM21A 03 75	CM21A 03 90	
4	489	CM21A 04 15	CM21A 04 30	CM21A 04 45	CM21A 04 60	CM21A 04 75	CM21A 04 90	
5	609	CM21A 05 15	CM21A 05 30	CM21A 05 45	CM21A 05 60	CM21A 05 75	CM21A 05 90	

More than 5 tracks on request.

magnetic corner tracks

VERSION CM22A / CM27

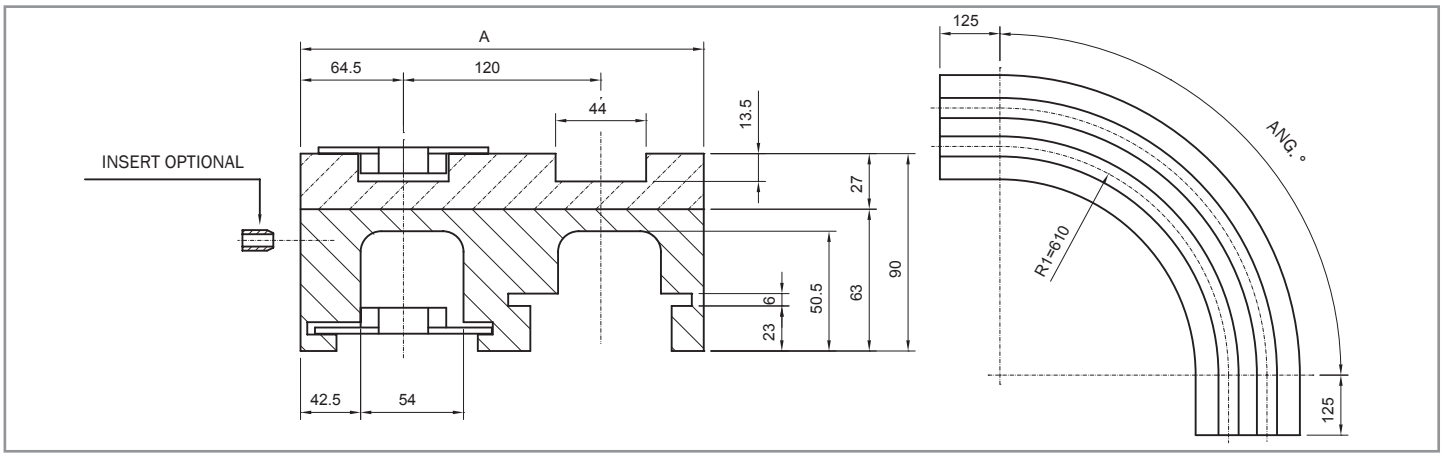

VERSION CM22A								CHAINS REF.
Nr. of Tracks	A	Curve angle 15°	Curve angle 30°	Curve angle 45°	Curve angle 60°	Curve angle 75°	Curve angle 90°	879 M K450 880 M K450 8811 M K450
1	129	CM22A 01 15	CM22A 01 30	CM22A 01 45	CM22A 01 60	CM22A 01 75	CM22A 01 90	
2	249	CM22A 02 15	CM22A 02 30	CM22A 02 45	CM22A 02 60	CM22A 02 75	CM22A 02 90	
3	369	CM22A 03 15	CM22A 03 30	CM22A 03 45	CM22A 03 60	CM22A 03 75	CM22A 03 90	
4	489	CM22A 04 15	CM22A 04 30	CM22A 04 45	CM22A 04 60	CM22A 04 75	CM22A 04 90	
5	609	CM22A 05 15	CM22A 05 30	CM22A 05 45	CM22A 05 60	CM22A 05 75	CM22A 05 90	

More than 5 tracks on request.

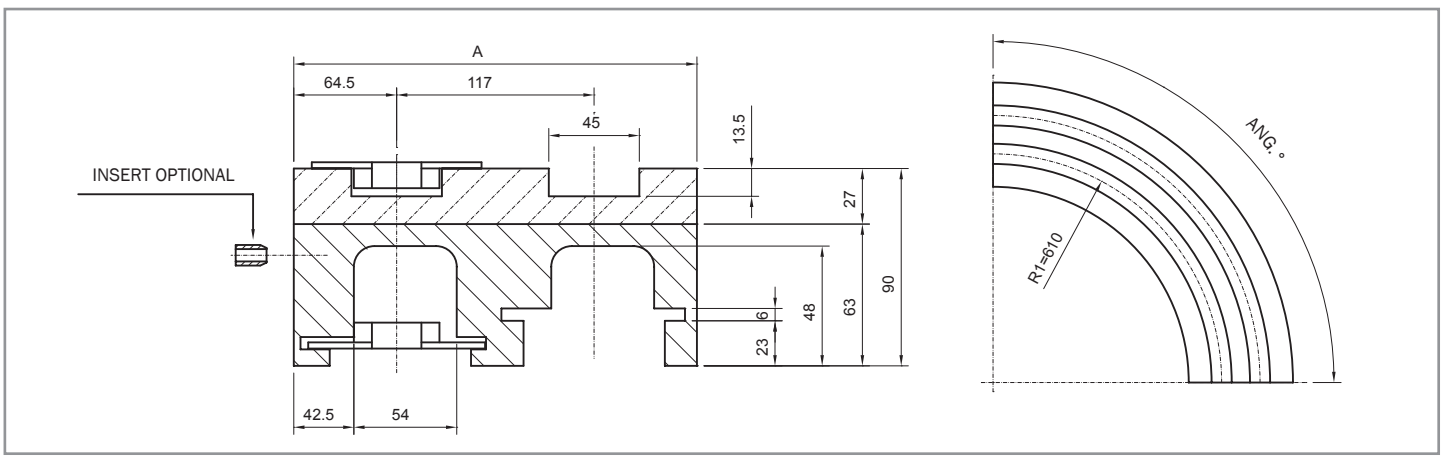

VERSION CM27								CHAINS REF.
Nr. of Tracks	A	Curve angle 15°	Curve angle 30°	Curve angle 45°	Curve angle 60°	Curve angle 75°	Curve angle 90°	879 M K450 880 M K450 8811 M K450
1	129	CM27 01 15	CM27 01 30	CM27 01 45	CM27 01 60	CM27 01 75	CM27 01 90	
2	246	CM27 02 15	CM27 02 30	CM27 02 45	CM27 02 60	CM27 02 75	CM27 02 90	
3	363	CM27 03 15	CM27 03 30	CM27 03 45	CM27 03 60	CM27 03 75	CM27 03 90	
4	480	CM27 04 15	CM27 04 30	CM27 04 45	CM27 04 60	CM27 04 75	CM27 04 90	
5	597	CM27 05 15	CM27 05 30	CM27 05 45	CM27 05 60	CM27 05 75	CM27 05 90	
6	714	CM27 06 15	CM27 06 30	CM27 06 45	CM27 06 60	CM27 06 75	CM27 06 90	
7	831	CM27 07 15	CM27 07 30	CM27 07 45	CM27 07 60	CM27 07 75	CM27 07 90	
8	948	CM27 08 15	CM27 08 30	CM27 08 45	CM27 08 60	CM27 08 75	CM27 08 90	

More than 8 tracks on request.

magnetic corner tracks

VERSION CM60 / CM61

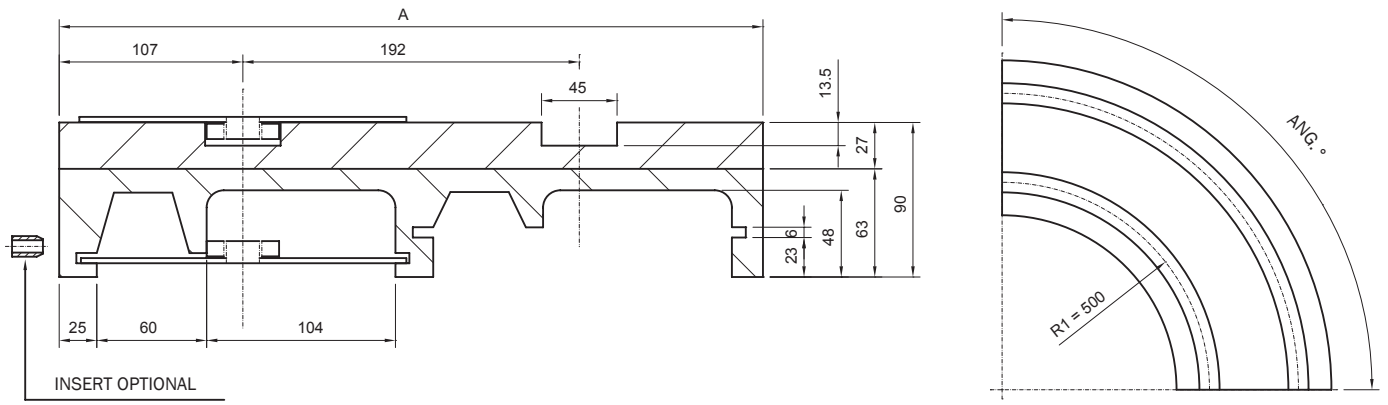

VERSION CM60							
Nr. of Tracks	A	Curve angle 15°	Curve angle 30°	Curve angle 45°	Curve angle 60°	Curve angle 75°	Curve angle 90°
1	214	CM60 01 15	CM60 01 30	CM60 01 45	CM60 01 60	CM60 01 75	CM60 01 90
2	406	CM60 02 15	CM60 02 30	CM60 02 45	CM60 02 60	CM60 02 75	CM60 02 90
3	602	CM60 03 15	CM60 03 30	CM60 03 45	CM60 03 60	CM60 03 75	CM60 03 90

CHAINS REF.
880 M K750
8811 M K750

More than 3 tracks on request.

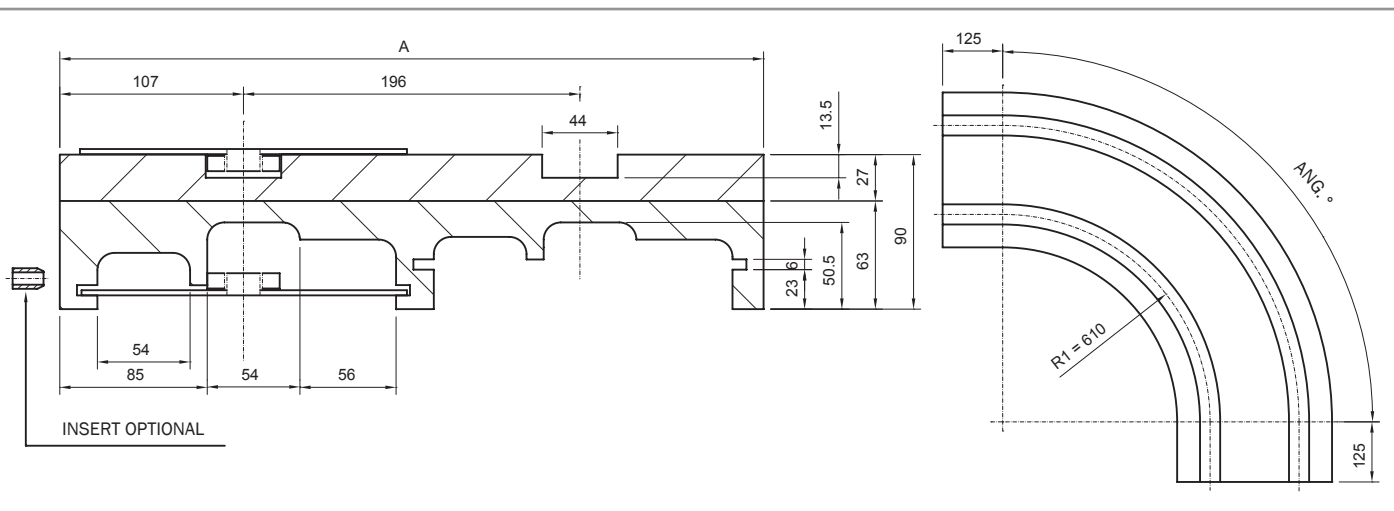

VERSION CM61							
Nr. of Tracks	A	Curve angle 15°	Curve angle 30°	Curve angle 45°	Curve angle 60°	Curve angle 75°	Curve angle 90°
1	214	CM61 01 15	CM61 01 30	CM61 01 45	CM61 01 60	CM61 01 75	CM61 01 90
2	410	CM61 02 15	CM61 02 30	CM61 02 45	CM61 02 60	CM61 02 75	CM61 02 90
3	606	CM61 03 15	CM61 03 30	CM61 03 45	CM61 03 60	CM61 03 75	CM61 03 90
4	802	CM61 04 15	CM61 04 30	CM61 04 45	CM61 04 60	CM61 04 75	CM61 04 90

CHAINS REF.
880 M K750
8811 M K750

More than 4 tracks on request.

magnetic corner tracks

VERSION CM62 / CM66

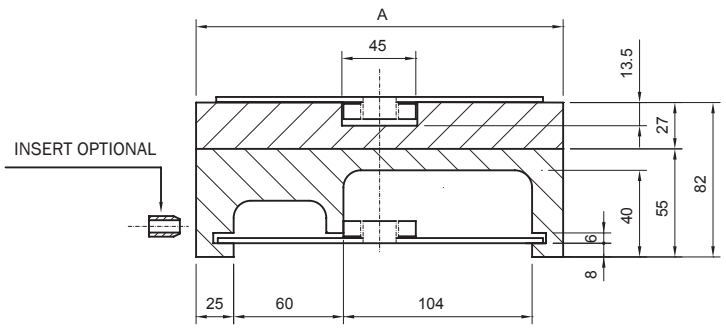

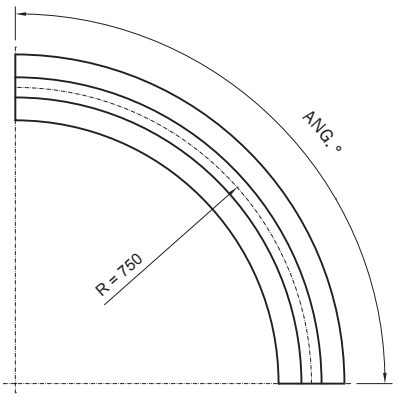

VERSION CM62							
Nr. of Tracks	A	Curve angle 15°	Curve angle 30°	Curve angle 45°	Curve angle 60°	Curve angle 75°	Curve angle 90°
1	214	CM62 01 15	CM62 01 30	CM62 01 45	CM62 01 60	CM62 01 75	CM62 01 90

CHAINS REF.
880 M K750
8811 M K750

More than 1 track on request.

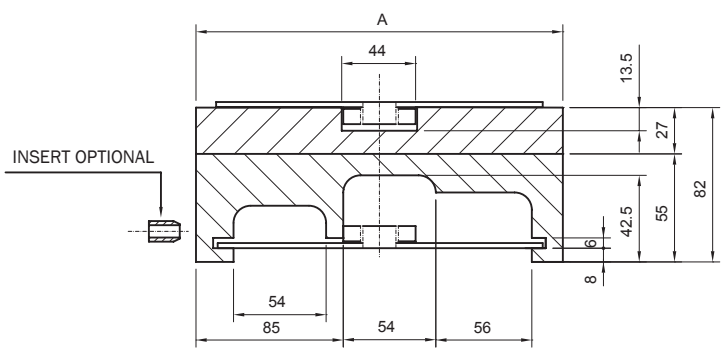

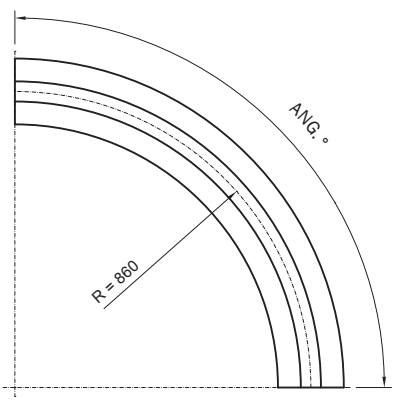

VERSION CM66							
Nr. of Tracks	A	Curve angle 15°	Curve angle 30°	Curve angle 45°	Curve angle 60°	Curve angle 75°	Curve angle 90°
1	214	CM66 01 15	CM66 01 30	CM66 01 45	CM66 01 60	CM66 01 75	CM66 01 90

CHAINS REF.
880 M K750
8811 M K750

More than 1 track on request.

magnetic corner tracks

VERSION CM65 / CM81

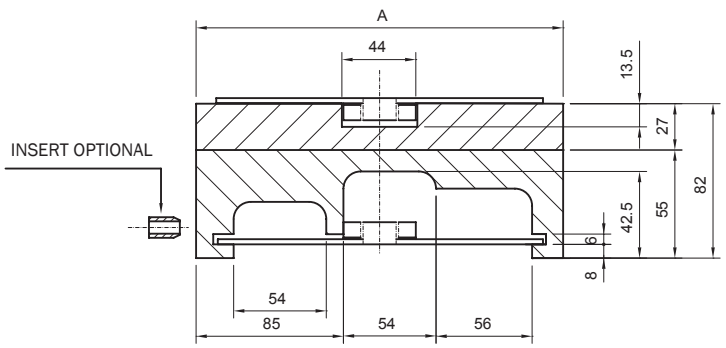

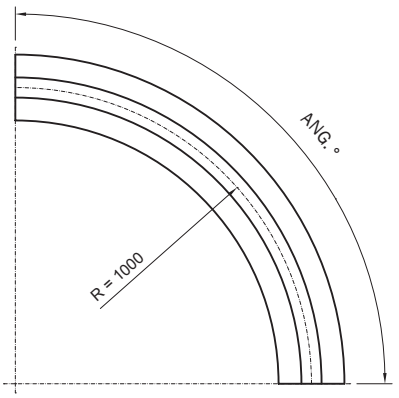

VERSION CM65							
Nr. of Tracks	A	Curve angle 15°	Curve angle 30°	Curve angle 45°	Curve angle 60°	Curve angle 75°	Curve angle 90°
1	214	CM65 01 15	CM65 01 30	CM65 01 45	CM65 01 60	CM65 01 75	CM65 01 90

CHAINS REF.
880 M K750
8811 M K750

More than 1 track on request.

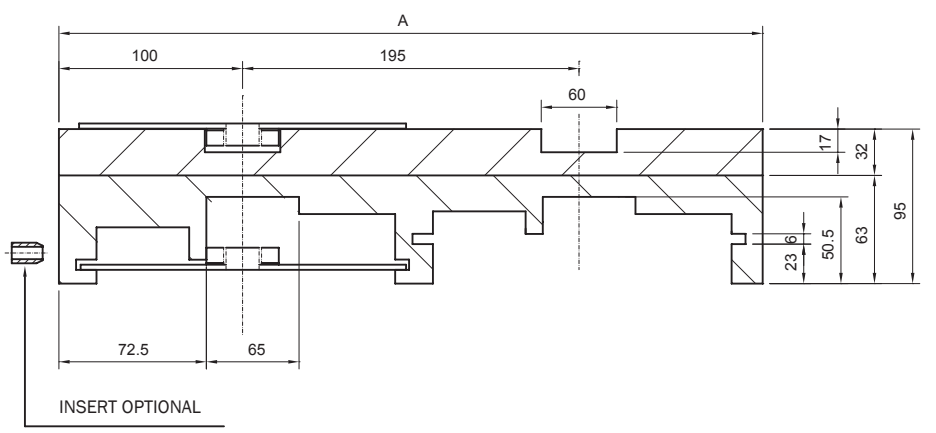

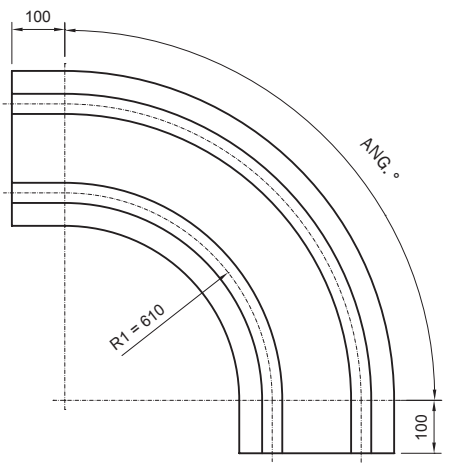

VERSION CM81							
Nr. of Tracks	A	Curve angle 15°	Curve angle 30°	Curve angle 45°	Curve angle 60°	Curve angle 75°	Curve angle 90°
1	200	CM81 01 15	CM81 01 30	CM81 01 45	CM81 01 60	CM81 01 75	CM81 01 90
2	395	CM81 02 15	CM81 02 30	CM81 02 45	CM81 02 60	CM81 02 75	CM81 02 90
3	590	CM81 03 15	CM81 03 30	CM81 03 45	CM81 03 60	CM81 03 75	CM81 03 90
4	785	CM81 04 15	CM81 04 30	CM81 04 45	CM81 04 60	CM81 04 75	CM81 04 90

CHAINS REF.
8817 M K750
8817 M G K750
882 M K750

More than 4 tracks on request.

magnetic corner tracks

VERSION CM85 / CM86

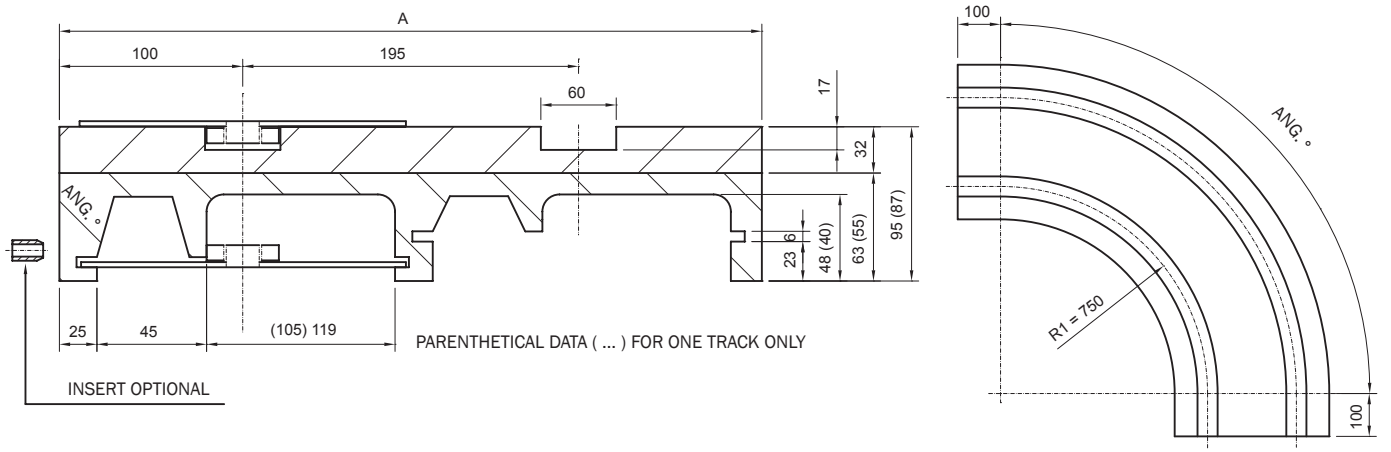

VERSION CM85							
Nr. of Tracks	A	Curve angle 15°	Curve angle 30°	Curve angle 45°	Curve angle 60°	Curve angle 75°	Curve angle 90°
1	200	CM85 01 15	CM85 01 30	CM85 01 45	CM85 01 60	CM85 01 75	CM85 01 90
2	395	CM85 02 15	CM85 02 30	CM85 02 45	CM85 02 60	CM85 02 75	CM85 02 90
3	590	CM85 03 15	CM85 03 30	CM85 03 45	CM85 03 60	CM85 03 75	CM85 03 90

CHAINS REF.
8817 M K750
8817 M G K750
882 M K750

More than 3 tracks on request.

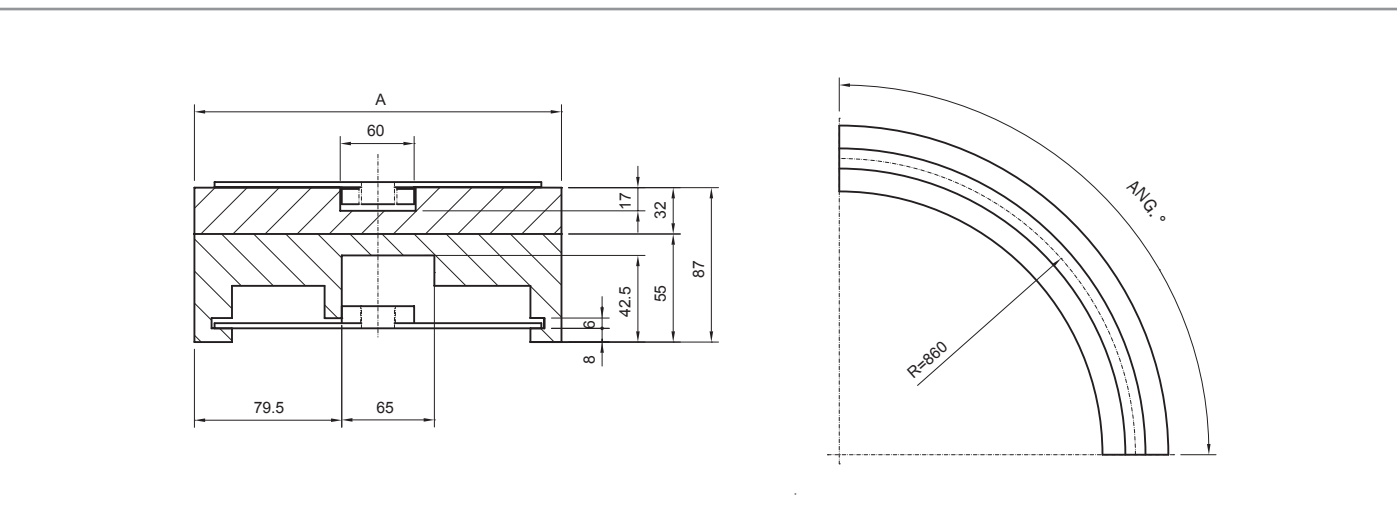

VERSION CM86							
Nr. of Tracks	A	Curve angle 15°	Curve angle 30°	Curve angle 45°	Curve angle 60°	Curve angle 75°	Curve angle 90°
1	214	CM86 01 15	CM86 01 30	CM86 01 45	CM86 01 60	CM86 01 75	CM86 01 90

CHAINS REF.
8817 M K750
8817 M G K750
882 M K750

More than 1 track on request.

magnetic corner tracks

VERSION CM80 / CM91

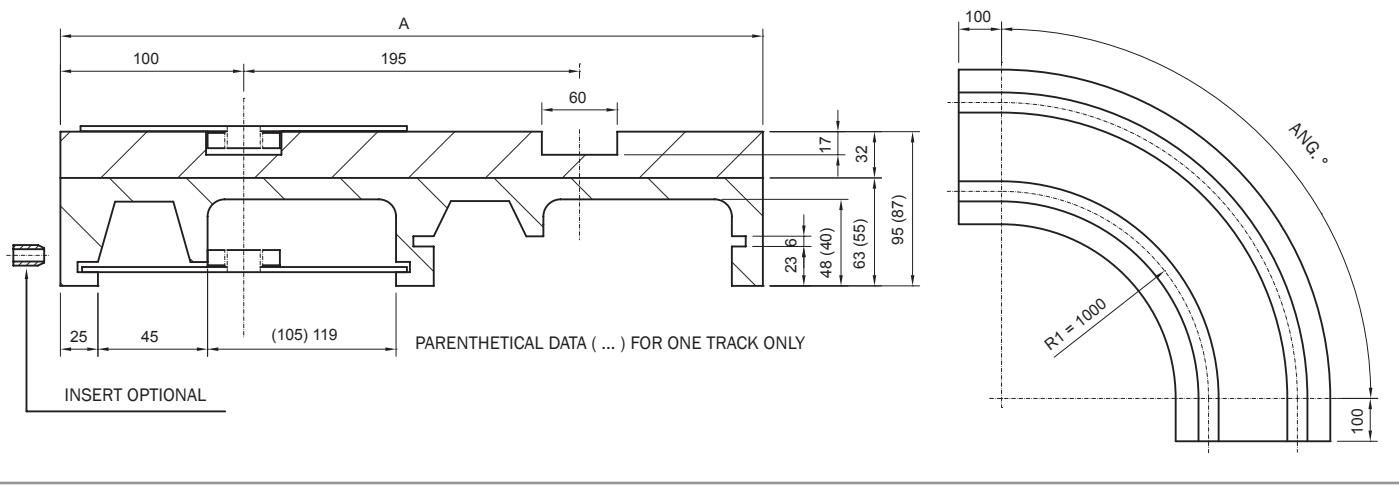

VERSION CM80								CHAINS REF.
Nr. of Tracks	A	Curve angle 15°	Curve angle 30°	Curve angle 45°	Curve angle 60°	Curve angle 75°	Curve angle 90°	8817 M K750 8817 M G K750 882 M K750
1	200	CM80 01 15	CM80 01 30	CM80 01 45	CM80 01 60	CM80 01 75	CM80 01 90	
2	395	CM80 02 15	CM80 02 30	CM80 02 45	CM80 02 60	CM80 02 75	CM80 02 90	
3	590	CM80 03 15	CM80 03 30	CM80 03 45	CM80 03 60	CM80 03 75	CM80 03 90	

More than 3 tracks on request.

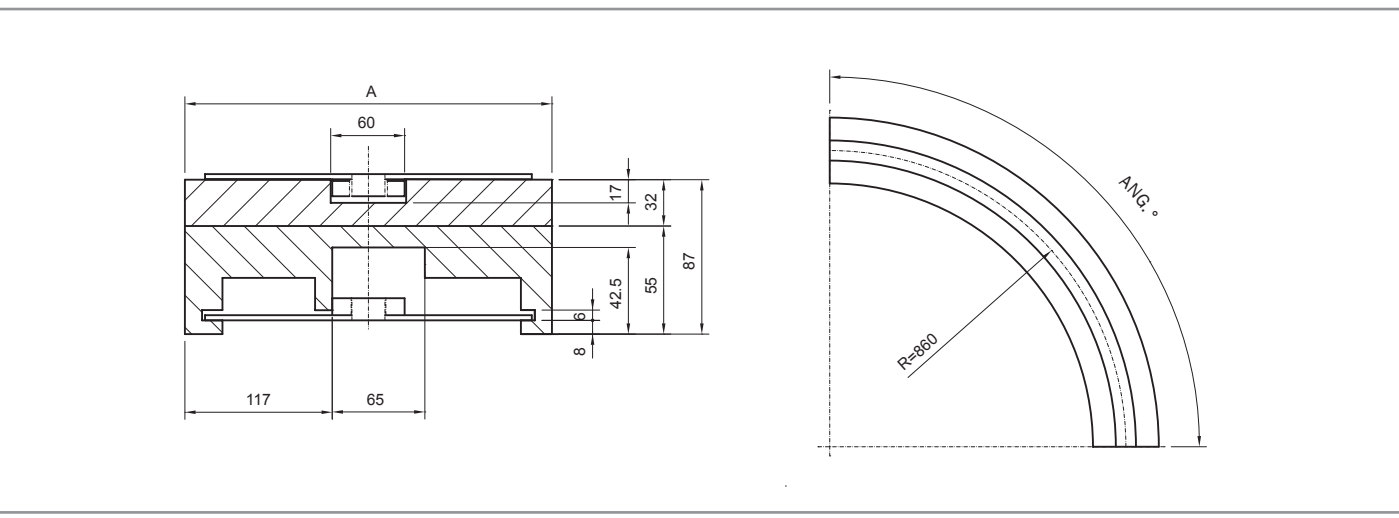

VERSION CM91								CHAINS REF.
Nr. of Tracks	A	Curve angle 15°	Curve angle 30°	Curve angle 45°	Curve angle 60°	Curve angle 75°	Curve angle 90°	882 M K1000
1	290	CM91 01 15	CM91 01 30	CM91 01 45	CM91 01 60	CM91 01 75	CM91 01 90	

More than 1 track on request.

magnetic corner tracks

VERSION CM93 / CM94

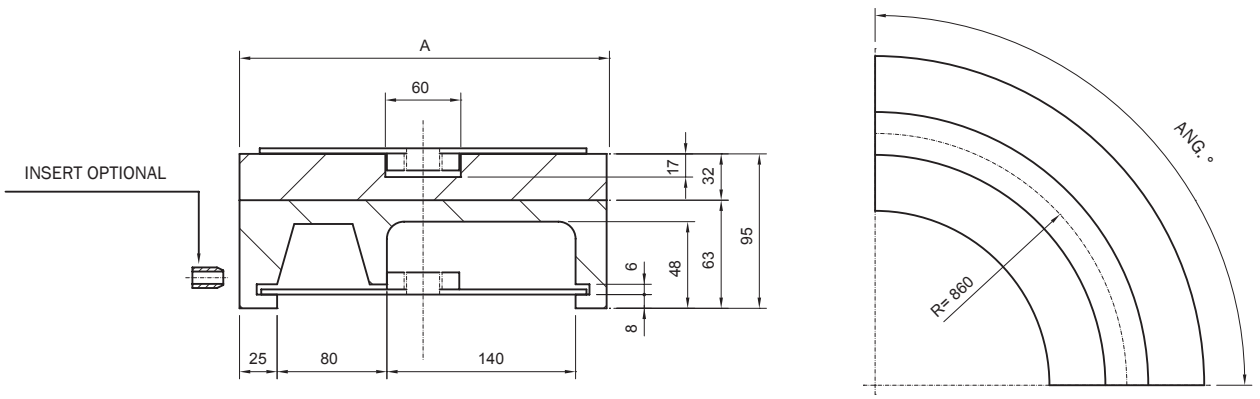

VERSION CM93							
Nr. of Tracks	A	Curve angle 15°	Curve angle 30°	Curve angle 45°	Curve angle 60°	Curve angle 75°	Curve angle 90°
1	270	CM93 01 15	CM93 01 30	CM93 01 45	CM93 01 60	CM93 01 75	CM93 01 90

CHAINS REF.
882 M K1000

More than 1 track on request.

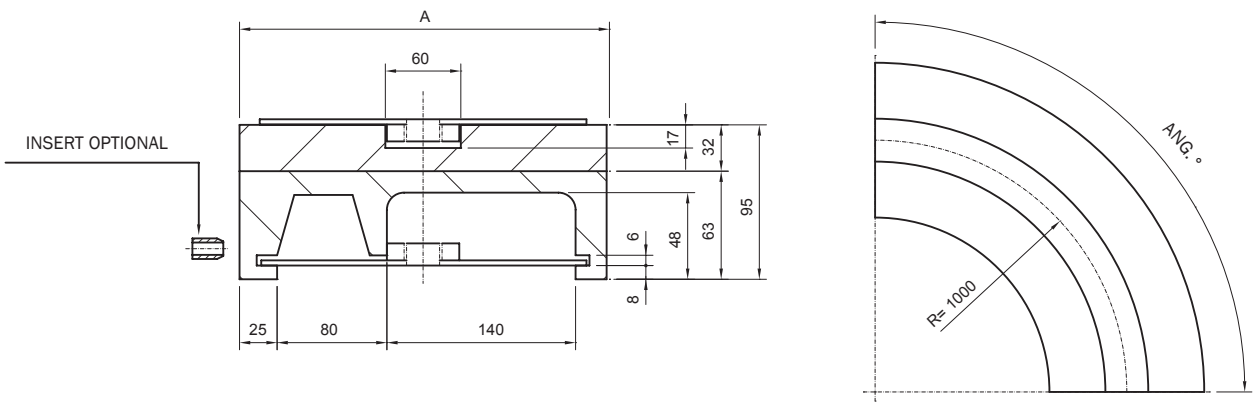

VERSION CM94							
Nr. of Tracks	A	Curve angle 15°	Curve angle 30°	Curve angle 45°	Curve angle 60°	Curve angle 75°	Curve angle 90°
1	270	CM94 01 15	CM94 01 30	CM94 01 45	CM94 01 60	CM94 01 75	CM94 01 90

CHAINS REF.
882 M K1000

More than 1 track on request.

magnetic corner tracks

VERSION CM96 / CM97

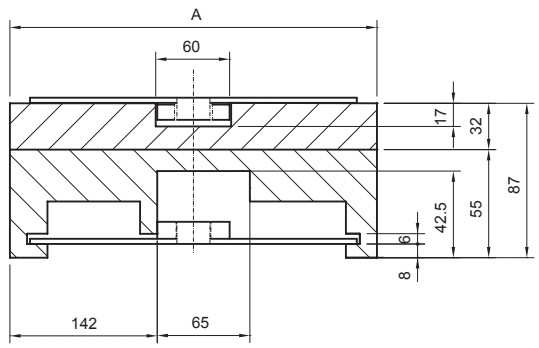

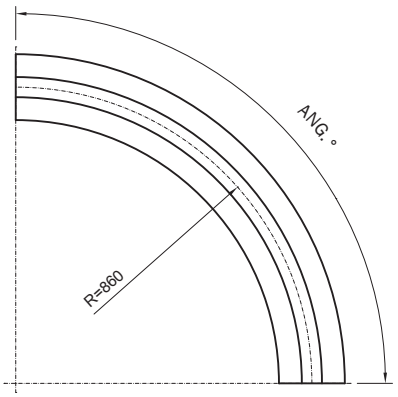

VERSION CM96							
Nr. of Tracks	A	Curve angle 15°	Curve angle 30°	Curve angle 45°	Curve angle 60°	Curve angle 75°	Curve angle 90°
1	340	CM96 01 15	CM96 01 30	CM96 01 45	CM96 01 60	CM96 01 75	CM96 01 90

CHAINS REF.
882 M K1200

More than 1 track on request.

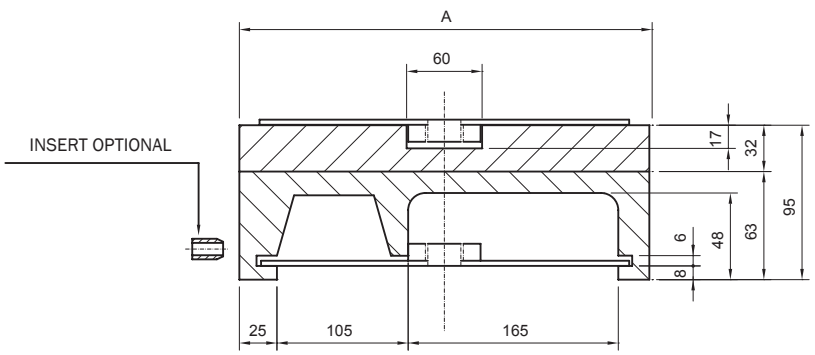

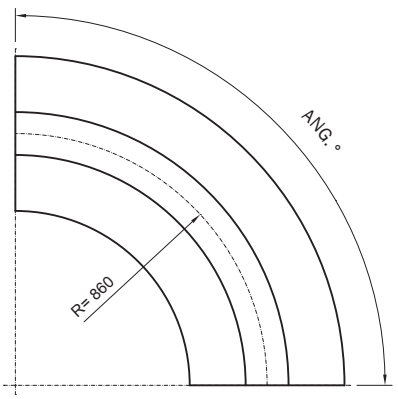

VERSION CM97							
Nr. of Tracks	A	Curve angle 15°	Curve angle 30°	Curve angle 45°	Curve angle 60°	Curve angle 75°	Curve angle 90°
1	320	CM97 01 15	CM97 01 30	CM97 01 45	CM97 01 60	CM97 01 75	CM97 01 90

CHAINS REF.
882 M K1200

More than 1 track on request.

magnetic corner tracks

VERSION CM98 / CMP68C

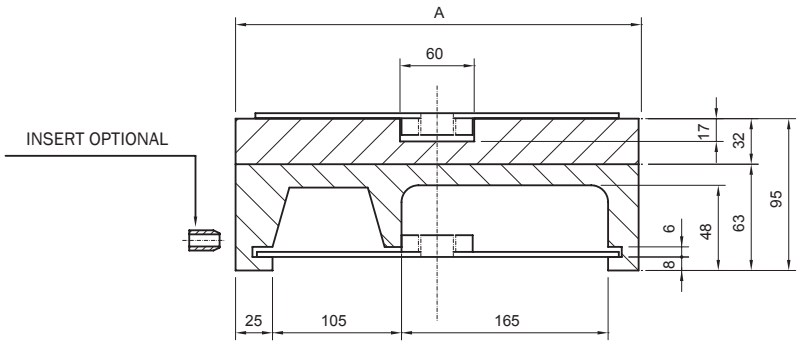

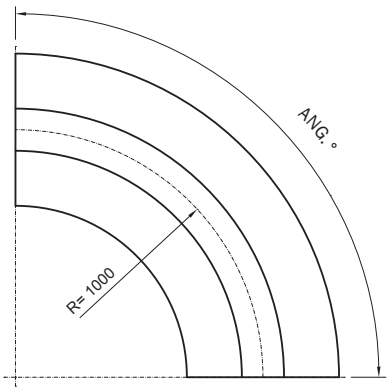

VERSION CM98							
Nr. of Tracks	A	Curve angle 15°	Curve angle 30°	Curve angle 45°	Curve angle 60°	Curve angle 75°	Curve angle 90°
1	320	CM98 01 15	CM98 01 30	CM98 01 45	CM98 01 60	CM98 01 75	CM98 01 90

CHAINS REF.
882 M K1200

More than 1 track on request.

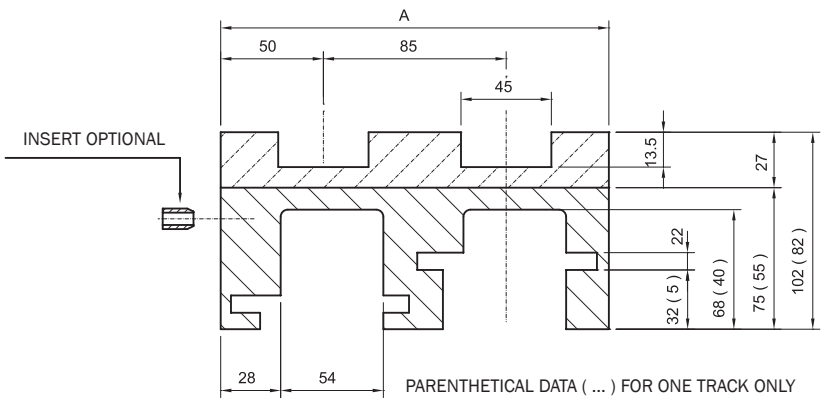

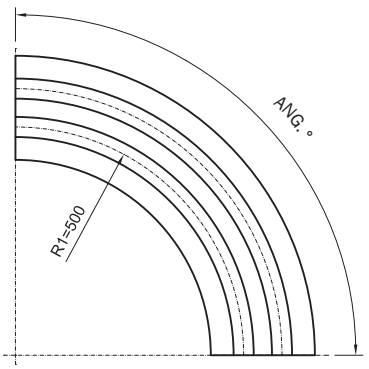

VERSION CMP68C							
Nr. of Tracks	A	Curve angle 15°	Curve angle 30°	Curve angle 45°	Curve angle 60°	Curve angle 75°	Curve angle 90°
1	100	CMP68C 01 15	CMP68C 01 30	CMP68C 01 45	CMP68C 01 60	CMP68C 01 75	CMP68C 01 90
2	185	CMP68C 02 15	CMP68C 02 30	CMP68C 02 45	CMP68C 02 60	CMP68C 02 75	CMP68C 02 90
3	270	CMP68C 03 15	CMP68C 03 30	CMP68C 03 45	CMP68C 03 60	CMP68C 03 75	CMP68C 03 90
4	355	CMP68C 04 15	CMP68C 04 30	CMP68C 04 45	CMP68C 04 60	CMP68C 04 75	CMP68C 04 90
5	440	CMP68C 05 15	CMP68C 05 30	CMP68C 05 45	CMP68C 05 60	CMP68C 05 75	CMP68C 05 90
6	525	CMP68C 06 15	CMP68C 06 30	CMP68C 06 45	CMP68C 06 60	CMP68C 06 75	CMP68C 06 90
7	610	CMP68C 07 15	CMP68C 07 30	CMP68C 07 45	CMP68C 07 60	CMP68C 07 75	CMP68C 07 90
8	695	CMP68C 08 15	CMP68C 08 30	CMP68C 08 45	CMP68C 08 60	CMP68C 08 75	CMP68C 08 90

CHAINS REF.
LBP 879 M K325

More than 8 tracks on request.

magnetic corner tracks

VERSION CMP02 / CMP861

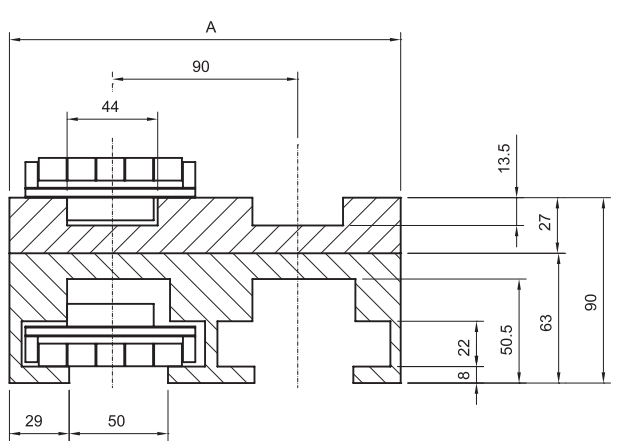

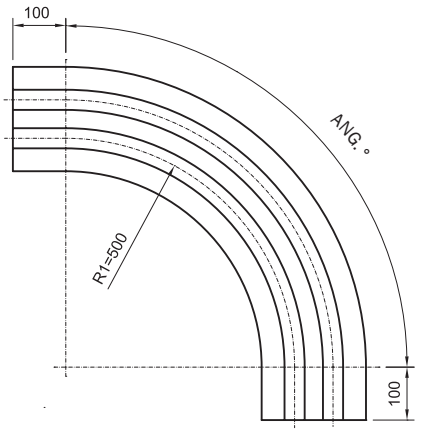

VERSION CMP02								CHAINS REF.
Nr. of Tracks	A	Curve angle 15°	Curve angle 30°	Curve angle 45°	Curve angle 60°	Curve angle 75°	Curve angle 90°	LBP 882 M K325
1	100	CMP02 01 15	CMP02 01 30	CMP02 01 45	CMP02 01 60	CMP02 01 75	CMP02 01 90	
2	190	CMP02 02 15	CMP02 02 30	CMP02 02 45	CMP02 02 60	CMP02 02 75	CMP02 02 90	
3	280	CMP02 03 15	CMP02 03 30	CMP02 03 45	CMP02 03 60	CMP02 03 75	CMP02 03 90	
4	370	CMP02 04 15	CMP02 04 30	CMP02 04 45	CMP02 04 60	CMP02 04 75	CMP02 04 90	
5	460	CMP02 05 15	CMP02 05 30	CMP02 05 45	CMP02 05 60	CMP02 05 75	CMP02 05 90	
6	550	CMP02 06 15	CMP02 06 30	CMP02 06 45	CMP02 06 60	CMP02 06 75	CMP02 06 90	More than 6 tracks on request.

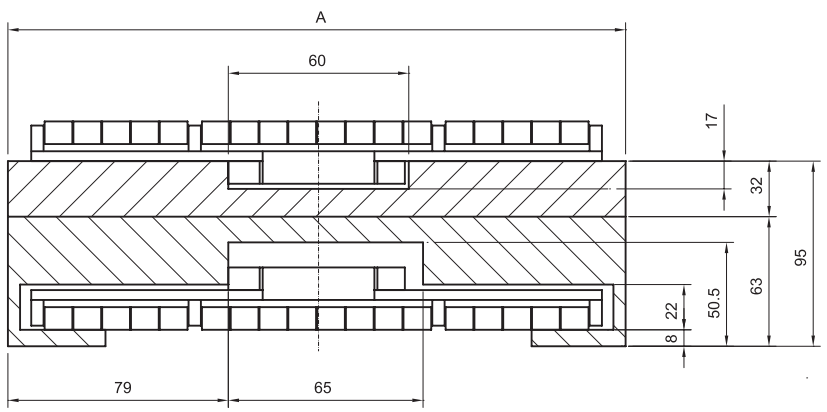

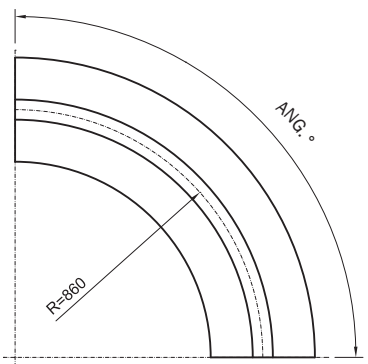

VERSION CMP861								CHAINS REF.
Nr. of Tracks	A	Curve angle 15°	Curve angle 30°	Curve angle 45°	Curve angle 60°	Curve angle 75°	Curve angle 90°	LBP 882 M K750
1	214	CMP861 01 15	CMP861 01 30	CMP861 01 45	CMP861 01 60	CMP861 01 75	CMP861 01 90	More than 1 track on request.

magnetic corner tracks

VERSION CMP86C / CMP93C

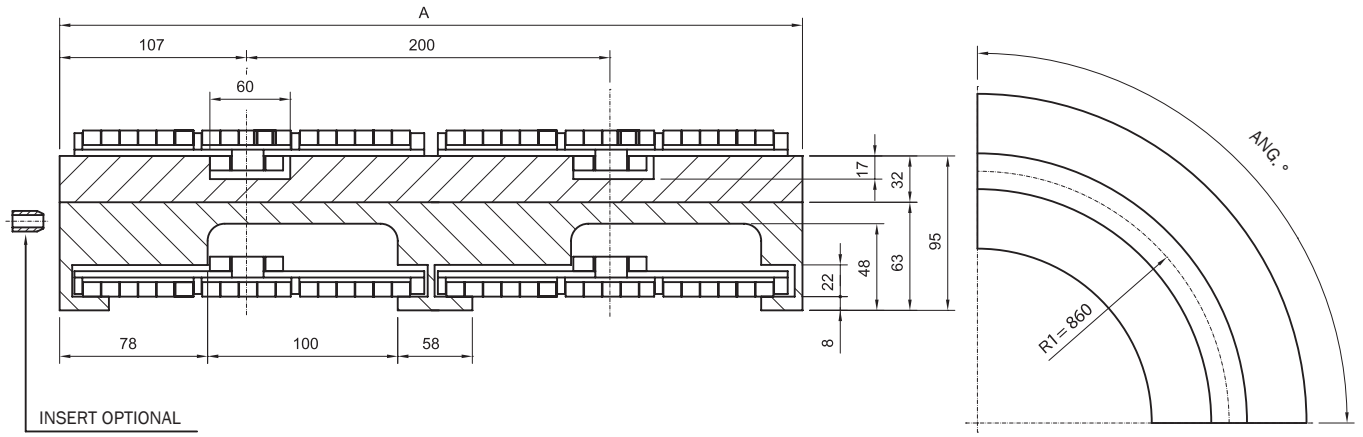

VERSION CMP86C								CHAINS REF.
Nr. of Tracks	A	Curve angle 15°	Curve angle 30°	Curve angle 45°	Curve angle 60°	Curve angle 75°	Curve angle 90°	LBP 882 M K750
1	214	CMP86C 01 15	CMP86C 01 30	CMP86C 01 45	CMP86C 01 60	CMP86C 01 75	CMP86C 01 90	
2	414	CMP86C 02 15	CMP86C 02 30	CMP86C 02 45	CMP86C 02 60	CMP86C 02 75	CMP86C 02 90	
3	614	CMP86C 03 15	CMP86C 03 30	CMP86C 03 45	CMP86C 03 60	CMP86C 03 75	CMP86C 03 90	More than 3 tracks on request.

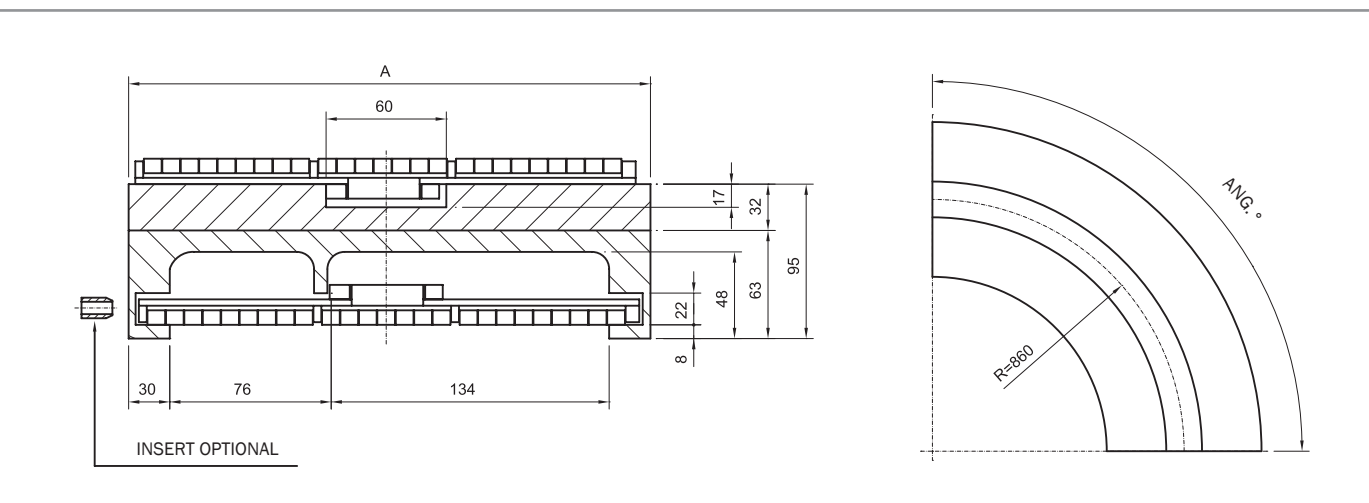

VERSION CMP93C								CHAINS REF.
Nr. of Tracks	A	Curve angle 15°	Curve angle 30°	Curve angle 45°	Curve angle 60°	Curve angle 75°	Curve angle 90°	LBP 882 M K1000
1	270	CMP93C 01 15	CMP93C 01 30	CMP93C 01 45	CMP93C 01 60	CMP93C 01 75	CMP93C 01 90	More than 1 track on request.

magnetic corner tracks

VERSION CMP91 / CMP94C

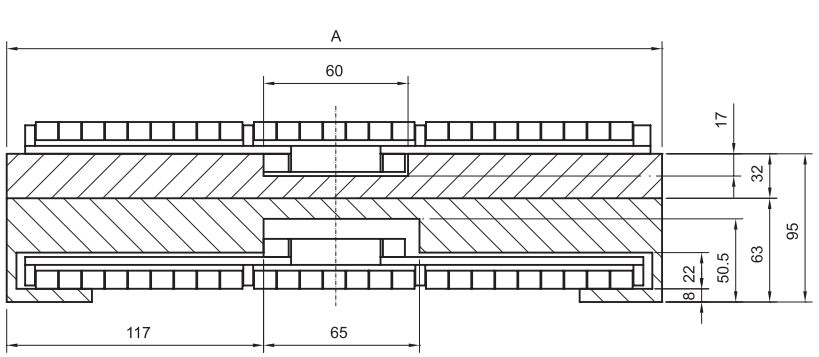

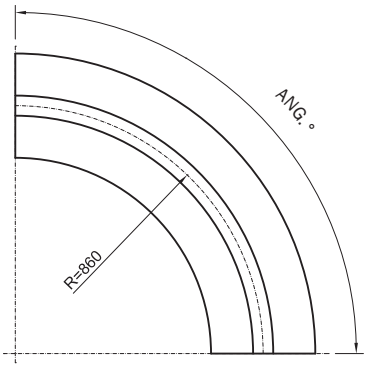

VERSION CMP91							
Nr. of Tracks	A	Curve angle 15°	Curve angle 30°	Curve angle 45°	Curve angle 60°	Curve angle 75°	Curve angle 90°
1	290	CMP91 01 15	CMP91 01 30	CMP91 01 45	CMP91 01 60	CMP91 01 75	CMP91 01 90

CHAINS REF.
LBP 882 M K1000

More than 1 track on request.

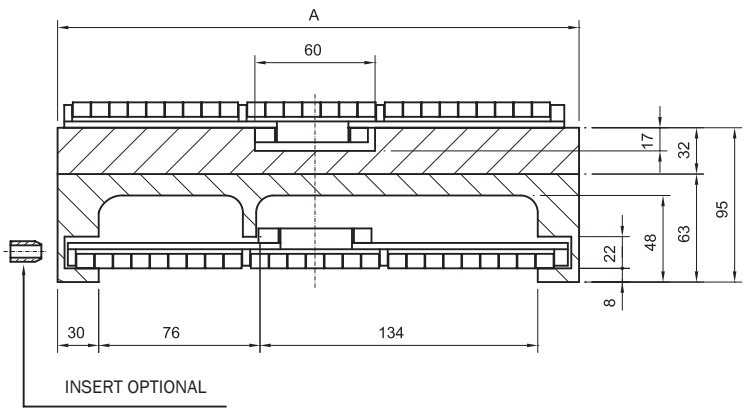

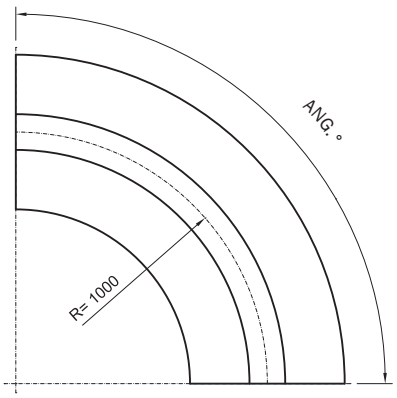

VERSION CMP94C							
Nr. of Tracks	A	Curve angle 15°	Curve angle 30°	Curve angle 45°	Curve angle 60°	Curve angle 75°	Curve angle 90°
1	270	CMP94C 01 15	CMP94C 01 30	CMP94C 01 45	CMP94C 01 60	CMP94C 01 75	CMP94C 01 90

CHAINS REF.
LBP 882 M K1000

More than 1 track on request.

magnetic corner tracks

VERSION CMP97C / CMP96

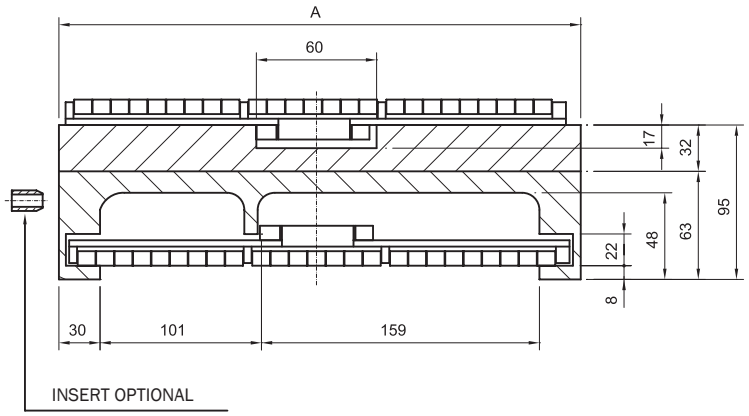

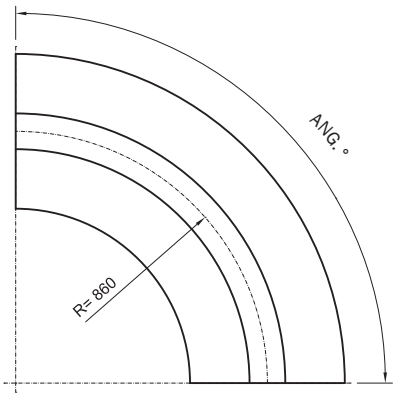

VERSION CMP97C								CHAINS REF.
Nr. of Tracks	A	Curve angle 15°	Curve angle 30°	Curve angle 45°	Curve angle 60°	Curve angle 75°	Curve angle 90°	LBP 882 M K1200
1	320	CMP97C 01 15	CMP97C 01 30	CMP97C 01 45	CMP97C 01 60	CMP97C 01 75	CMP97C 01 90	More than 1 track on request.

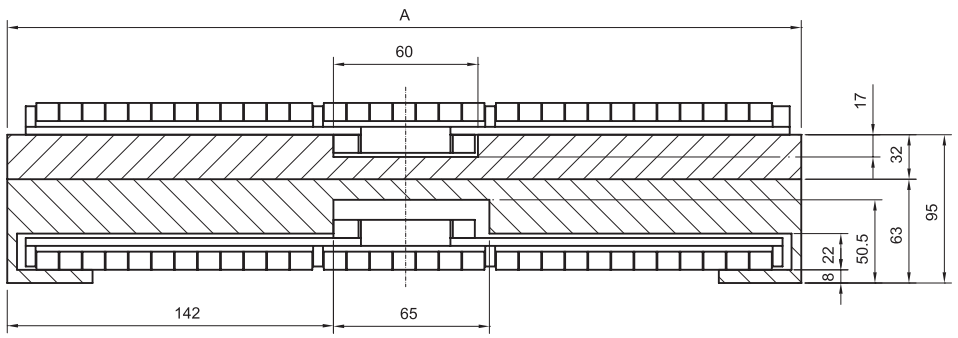

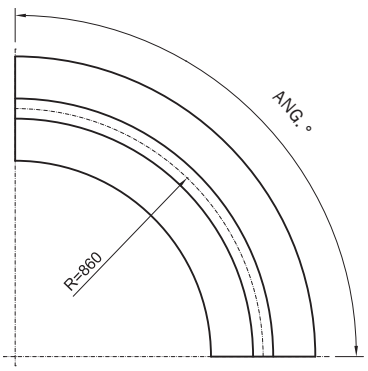

VERSION CMP96								CHAINS REF.
Nr. of Tracks	A	Curve angle 15°	Curve angle 30°	Curve angle 45°	Curve angle 60°	Curve angle 75°	Curve angle 90°	LBP 882 M K1200
1	340	CMP96 01 15	CMP96 01 30	CMP96 01 45	CMP96 01 60	CMP96 01 75	CMP96 01 90	More than 1 track on request.

magnetic corner tracks

VERSION CMP98C / CMB06

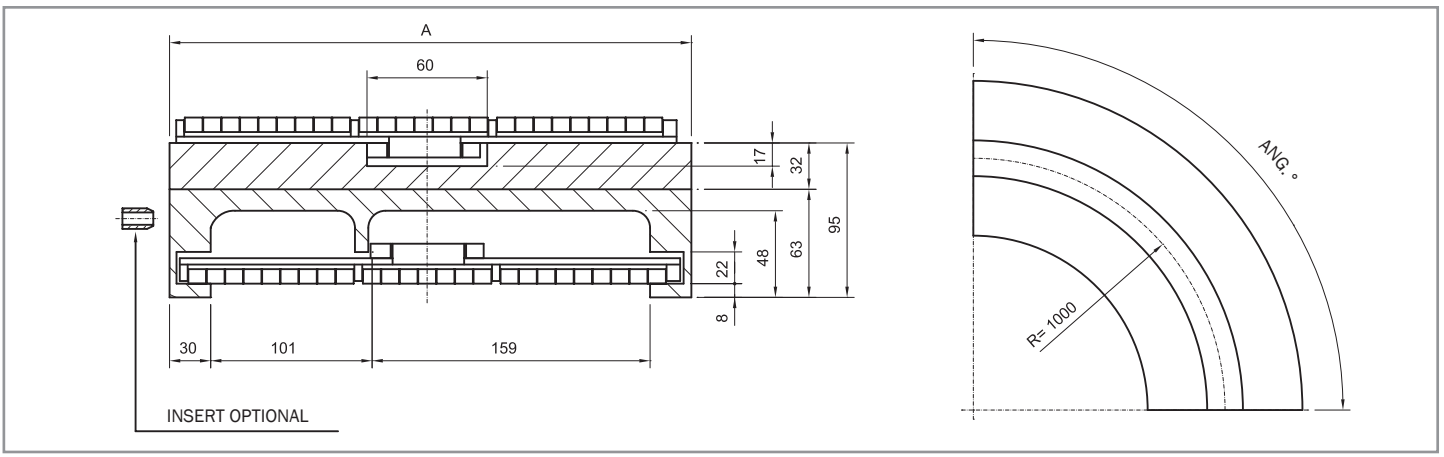

VERSION CMP98C								CHAINS REF.
Nr. of Tracks	A	Curve angle 15°	Curve angle 30°	Curve angle 45°	Curve angle 60°	Curve angle 75°	Curve angle 90°	LBP 882 M K1200
1	320	CMP98C 01 15	CMP98C 01 30	CMP98C 01 45	CMP98C 01 60	CMP98C 01 75	CMP98C 01 90	More than 1 track on request.

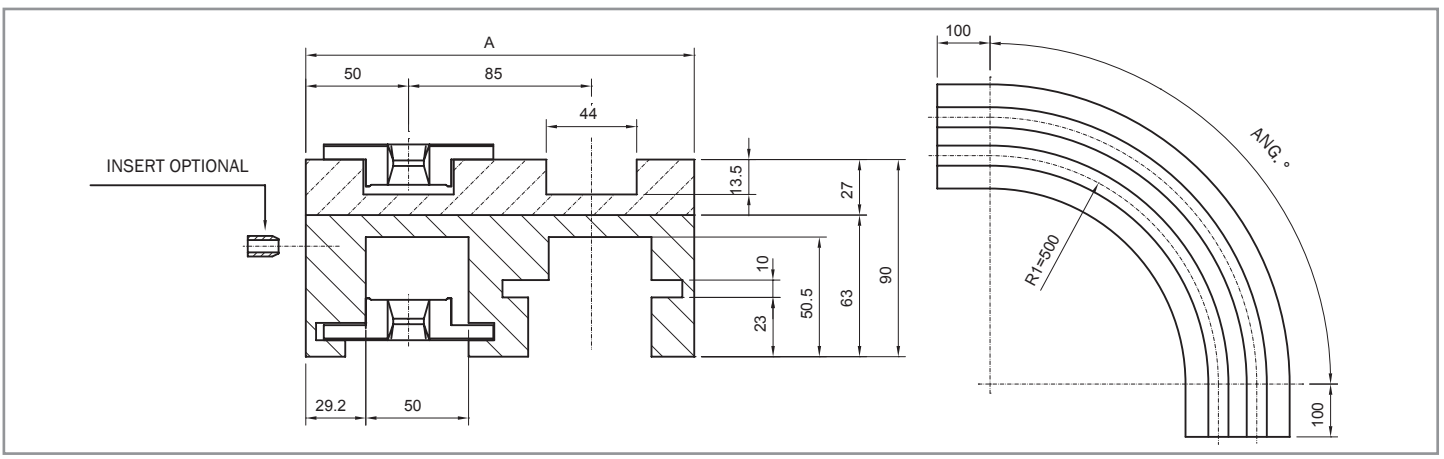

VERSION CMB06								CHAINS REF.
Nr. of Tracks	A	Curve angle 15°	Curve angle 30°	Curve angle 45°	Curve angle 60°	Curve angle 75°	Curve angle 90°	780 M K330
1	100	CMB06 01 15	CMB06 01 30	CMB06 01 45	CMB06 01 60	CMB06 01 75	CMB06 01 90	
2	185	CMB06 02 15	CMB06 02 30	CMB06 02 45	CMB06 02 60	CMB06 02 75	CMB06 02 90	
3	270	CMB06 03 15	CMB06 03 30	CMB06 03 45	CMB06 03 60	CMB06 03 75	CMB06 03 90	
4	355	CMB06 04 15	CMB06 04 30	CMB06 04 45	CMB06 04 60	CMB06 04 75	CMB06 04 90	
5	440	CMB06 05 15	CMB06 05 30	CMB06 05 45	CMB06 05 60	CMB06 05 75	CMB06 05 90	
6	525	CMB06 06 15	CMB06 06 30	CMB06 06 45	CMB06 06 60	CMB06 06 75	CMB06 06 90	More than 6 tracks on request.

magnetic corner tracks

VERSION CMB07 / CMB04

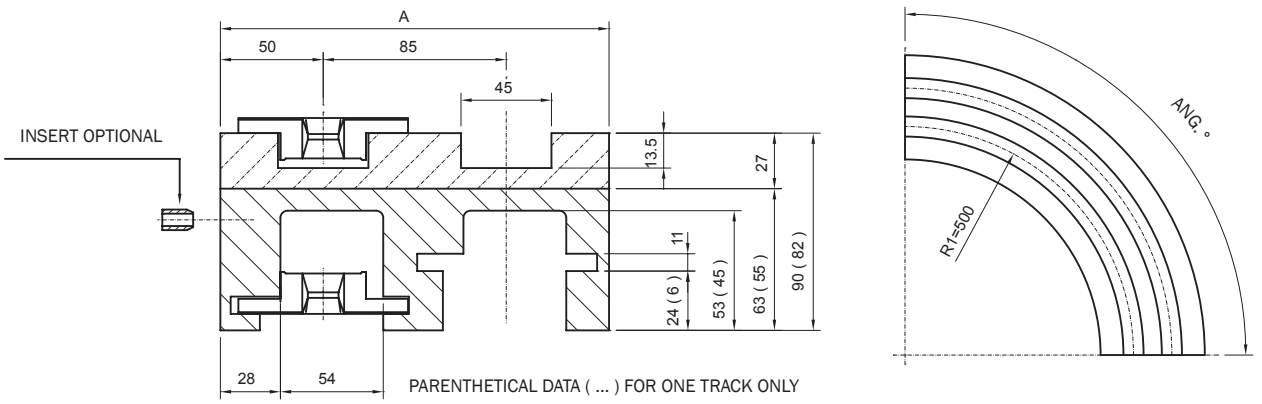

VERSION CMB07								CHAINS REF.
Nr. of Tracks	A	Curve angle 15°	Curve angle 30°	Curve angle 45°	Curve angle 60°	Curve angle 75°	Curve angle 90°	780 M K330
1	100	CMB07 01 15	CMB07 01 30	CMB07 01 45	CMB07 01 60	CMB07 01 75	CMB07 01 90	
2	185	CMB07 02 15	CMB07 02 30	CMB07 02 45	CMB07 02 60	CMB07 02 75	CMB07 02 90	
3	270	CMB07 03 15	CMB07 03 30	CMB07 03 45	CMB07 03 60	CMB07 03 75	CMB07 03 90	
4	355	CMB07 04 15	CMB07 04 30	CMB07 04 45	CMB07 04 60	CMB07 04 75	CMB07 04 90	
5	440	CMB07 05 15	CMB07 05 30	CMB07 05 45	CMB07 05 60	CMB07 05 75	CMB07 05 90	
6	525	CMB07 06 15	CMB07 06 30	CMB07 06 45	CMB07 06 60	CMB07 06 75	CMB07 06 90	
7	610	CMB07 07 15	CMB07 07 30	CMB07 07 45	CMB07 07 60	CMB07 07 75	CMB07 07 90	
8	695	CMB07 08 15	CMB07 08 30	CMB07 08 45	CMB07 08 60	CMB07 08 75	CMB07 08 90	

More than 8 tracks on request.

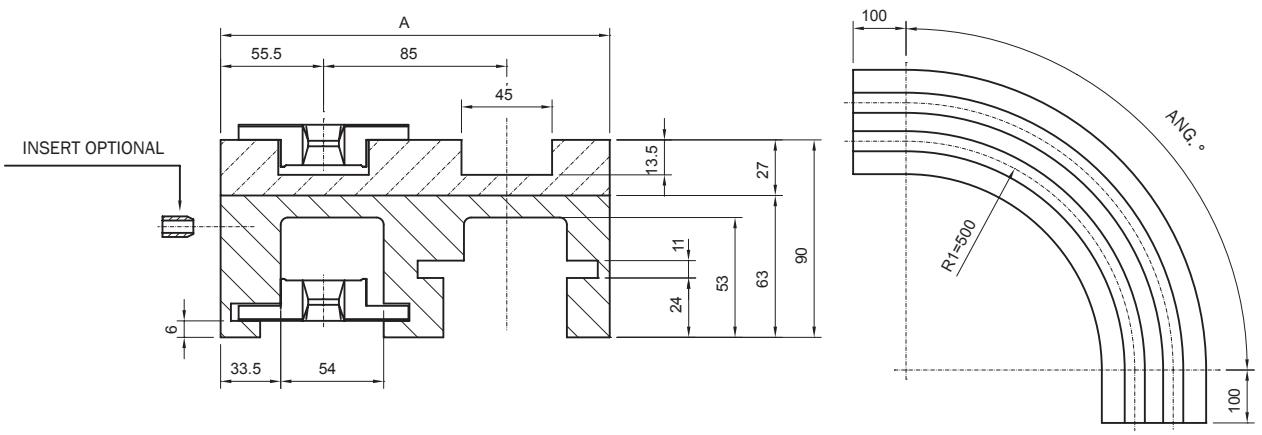

VERSION CMB04								CHAINS REF.
Nr. of Tracks	A	Curve angle 15°	Curve angle 30°	Curve angle 45°	Curve angle 60°	Curve angle 75°	Curve angle 90°	780 M K330
1	111	CMB04 01 15	CMB04 01 30	CMB04 01 45	CMB04 01 60	CMB04 01 75	CMB04 01 90	
2	196	CMB04 02 15	CMB04 02 30	CMB04 02 45	CMB04 02 60	CMB04 02 75	CMB04 02 90	
3	281	CMB04 03 15	CMB04 03 30	CMB04 03 45	CMB04 03 60	CMB04 03 75	CMB04 03 90	
4	366	CMB04 04 15	CMB04 04 30	CMB04 04 45	CMB04 04 60	CMB04 04 75	CMB04 04 90	
5	451	CMB04 05 15	CMB04 05 30	CMB04 05 45	CMB04 05 60	CMB04 05 75	CMB04 05 90	
6	536	CMB04 06 15	CMB04 06 30	CMB04 06 45	CMB04 06 60	CMB04 06 75	CMB04 06 90	
7	621	CMB04 07 15	CMB04 07 30	CMB04 07 45	CMB04 07 60	CMB04 07 75	CMB04 07 90	
8	706	CMB04 08 15	CMB04 08 30	CMB04 08 45	CMB04 08 60	CMB04 08 75	CMB04 08 90	

More than 8 tracks on request.

magnetic corner tracks

VERSION CMB08 / CMB05D

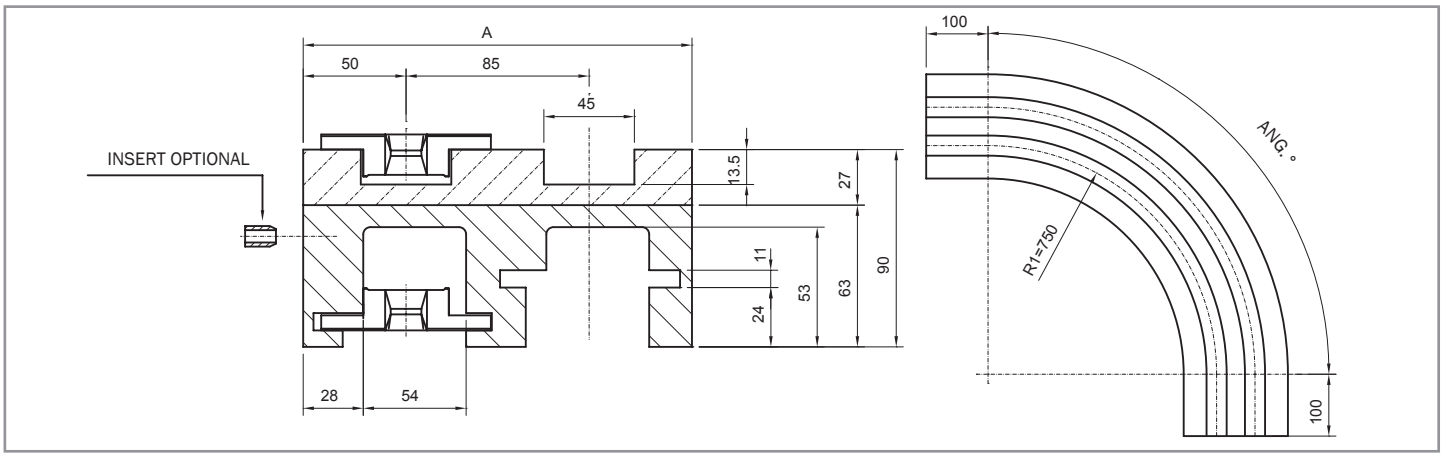

VERSION CMB08								CHAINS REF.
Nr. of Tracks	A	Curve angle 15°	Curve angle 30°	Curve angle 45°	Curve angle 60°	Curve angle 75°	Curve angle 90°	780 M K330
1	100	CMB08 01 15	CMB08 01 30	CMB08 01 45	CMB08 01 60	CMB08 01 75	CMB08 01 90	
2	185	CMB08 02 15	CMB08 02 30	CMB08 02 45	CMB08 02 60	CMB08 02 75	CMB08 02 90	
3	270	CMB08 03 15	CMB08 03 30	CMB08 03 45	CMB08 03 60	CMB08 03 75	CMB08 03 90	
4	355	CMB08 04 15	CMB08 04 30	CMB08 04 45	CMB08 04 60	CMB08 04 75	CMB08 04 90	
5	440	CMB08 05 15	CMB08 05 30	CMB08 05 45	CMB08 05 60	CMB08 05 75	CMB08 05 90	
6	525	CMB08 06 15	CMB08 06 30	CMB08 06 45	CMB08 06 60	CMB08 06 75	CMB08 06 90	
7	610	CMB08 07 15	CMB08 07 30	CMB08 07 45	CMB08 07 60	CMB08 07 75	CMB08 07 90	
8	695	CMB08 08 15	CMB08 08 30	CMB08 08 45	CMB08 08 60	CMB08 08 75	CMB08 08 90	

More than 8 tracks on request.

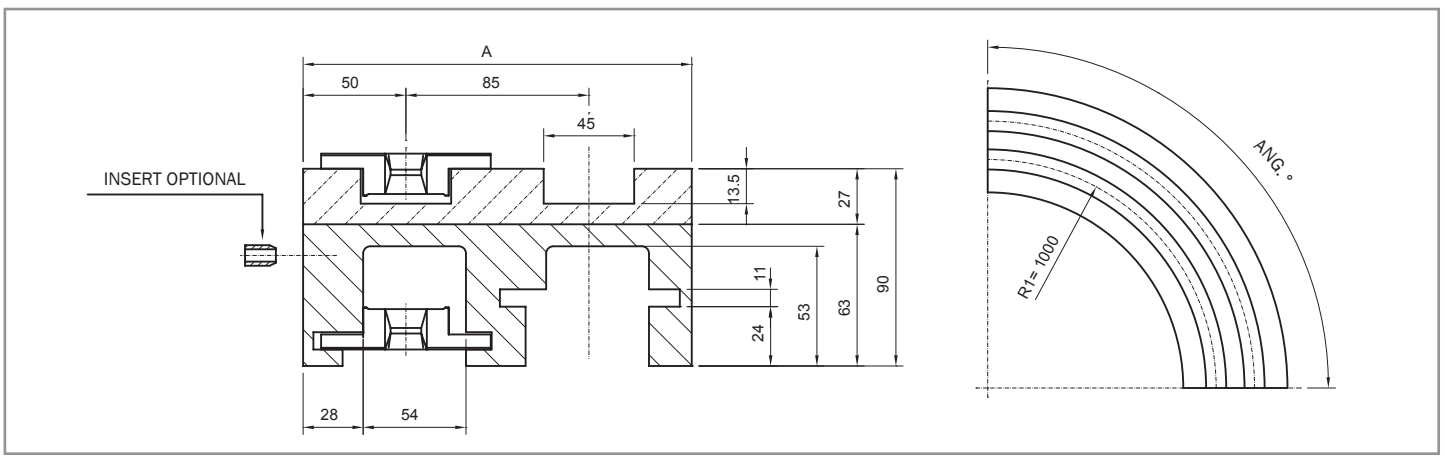

VERSION CMB05D								CHAINS REF.
Nr. of Tracks	A	Curve angle 15°	Curve angle 30°	Curve angle 45°	Curve angle 60°	Curve angle 75°	Curve angle 90°	780 M K330
1	100	CMB05D 01 15	CMB05D 01 30	CMB05D 01 45	CMB05D 01 60	CMB05D 01 75	CMB05D 01 90	
2	185	CMB05D 02 15	CMB05D 02 30	CMB05D 02 45	CMB05D 02 60	CMB05D 02 75	CMB05D 02 90	
3	270	CMB05D 03 15	CMB05D 03 30	CMB05D 03 45	CMB05D 03 60	CMB05D 03 75	CMB05D 03 90	
4	355	CMB05D 04 15	CMB05D 04 30	CMB05D 04 45	CMB05D 04 60	CMB05D 04 75	CMB05D 04 90	
5	440	CMB05D 05 15	CMB05D 05 30	CMB05D 05 45	CMB05D 05 60	CMB05D 05 75	CMB05D 05 90	
6	525	CMB05D 06 15	CMB05D 06 30	CMB05D 06 45	CMB05D 06 60	CMB05D 06 75	CMB05D 06 90	
7	610	CMB05D 07 15	CMB05D 07 30	CMB05D 07 45	CMB05D 07 60	CMB05D 07 75	CMB05D 07 90	
8	695	CMB05D 08 15	CMB05D 08 30	CMB05D 08 45	CMB05D 08 60	CMB05D 08 75	CMB05D 08 90	

More than 8 tracks on request.

magnetic corner tracks

VERSION CMB22 / CMB27

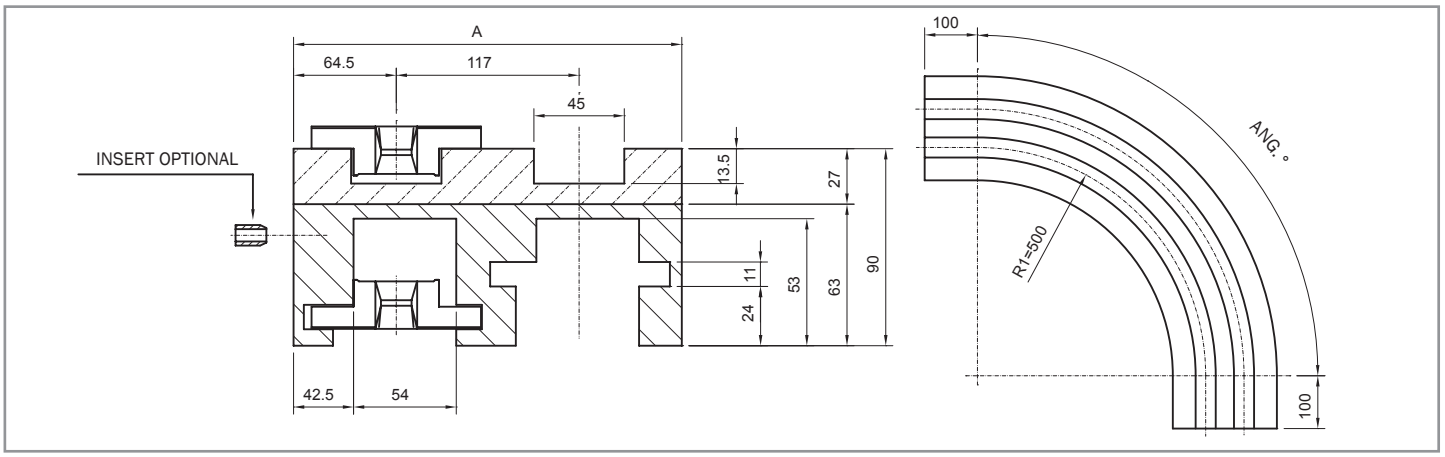

VERSION CMB22							
Nr. of Tracks	A	Curve angle 15°	Curve angle 30°	Curve angle 45°	Curve angle 60°	Curve angle 75°	Curve angle 90°
1	129	CMB22 01 15	CMB22 01 30	CMB22 01 45	CMB22 01 60	CMB22 01 75	CMB22 01 90
2	246	CMB22 02 15	CMB22 02 30	CMB22 02 45	CMB22 02 60	CMB22 02 75	CMB22 02 90
3	363	CMB22 03 15	CMB22 03 30	CMB22 03 45	CMB22 03 60	CMB22 03 75	CMB22 03 90
4	480	CMB22 04 15	CMB22 04 30	CMB22 04 45	CMB22 04 60	CMB22 04 75	CMB22 04 90

CHAINS REF.

780 M K450

More than 4 tracks on request.

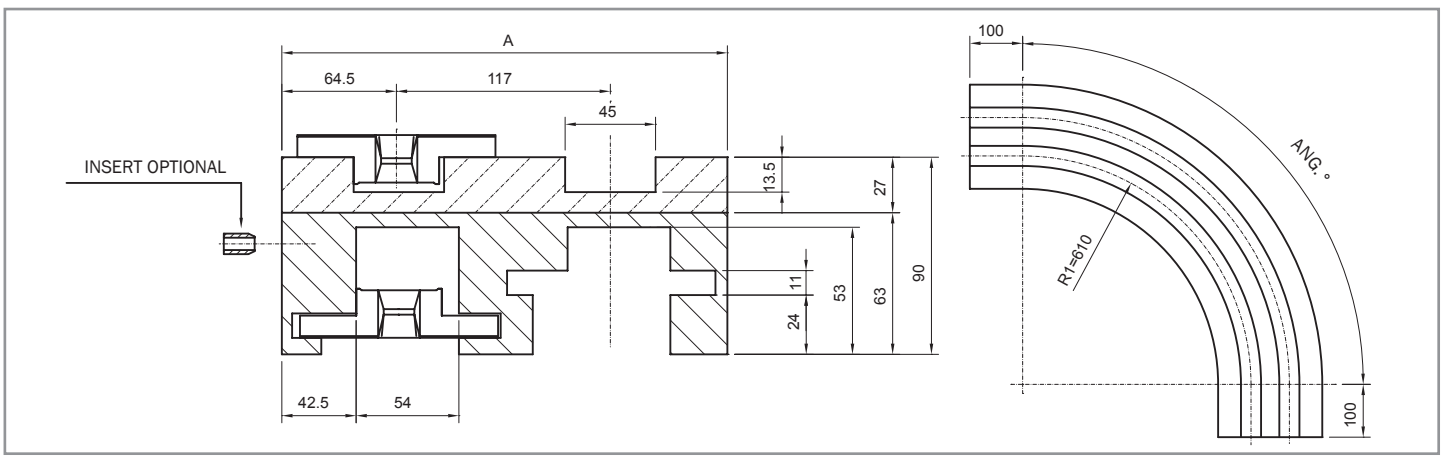

VERSION CMB27							
Nr. of Tracks	A	Curve angle 15°	Curve angle 30°	Curve angle 45°	Curve angle 60°	Curve angle 75°	Curve angle 90°
1	129	CMB27 01 15	CMB27 01 30	CMB27 01 45	CMB27 01 60	CMB27 01 75	CMB27 01 90
2	246	CMB27 02 15	CMB27 02 30	CMB27 02 45	CMB27 02 60	CMB27 02 75	CMB27 02 90
3	363	CMB27 03 15	CMB27 03 30	CMB27 03 45	CMB27 03 60	CMB27 03 75	CMB27 03 90
4	480	CMB27 04 15	CMB27 04 30	CMB27 04 45	CMB27 04 60	CMB27 04 75	CMB27 04 90

CHAINS REF.

780 M K450

More than 4 tracks on request.

magnetic corner tracks

VERSION CMC06 / CMC07

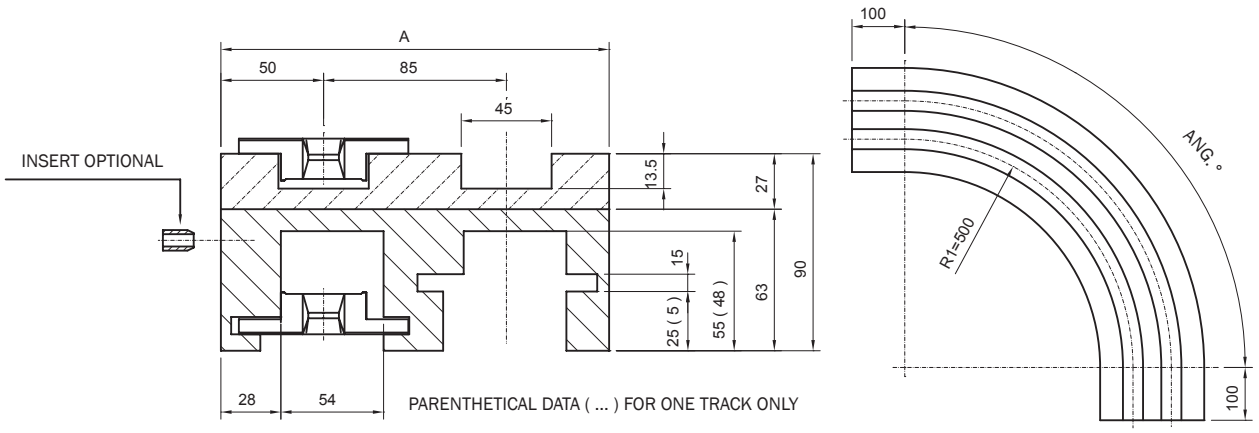

VERSION CMC06								CHAINS REF.
Nr. of Tracks	A	Curve angle 15°	Curve angle 30°	Curve angle 45°	Curve angle 60°	Curve angle 75°	Curve angle 90°	790 M K330
1	100	CMC06 01 15	CMC06 01 30	CMC06 01 45	CMC06 01 60	CMC06 01 75	CMC06 01 90	
2	185	CMC06 02 15	CMC06 02 30	CMC06 02 45	CMC06 02 60	CMC06 02 75	CMC06 02 90	
3	270	CMC06 03 15	CMC06 03 30	CMC06 03 45	CMC06 03 60	CMC06 03 75	CMC06 03 90	
4	355	CMC06 04 15	CMC06 04 30	CMC06 04 45	CMC06 04 60	CMC06 04 75	CMC06 04 90	
5	440	CMC06 05 15	CMC06 05 30	CMC06 05 45	CMC06 05 60	CMC06 05 75	CMC06 05 90	
6	525	CMC06 06 15	CMC06 06 30	CMC06 06 45	CMC06 06 60	CMC06 06 75	CMC06 06 90	
7	610	CMC06 07 15	CMC06 07 30	CMC06 07 45	CMC06 07 60	CMC06 07 75	CMC06 07 90	
8	695	CMC06 08 15	CMC06 08 30	CMC06 08 45	CMC06 08 60	CMC06 08 75	CMC06 08 90	

More than 8 tracks on request.

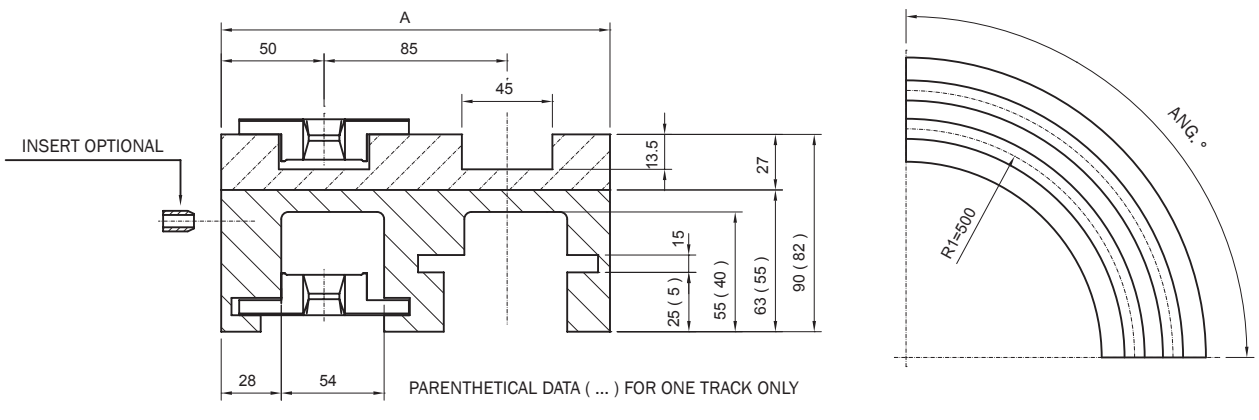

VERSION CMC07								CHAINS REF.
Nr. of Tracks	A	Curve angle 15°	Curve angle 30°	Curve angle 45°	Curve angle 60°	Curve angle 75°	Curve angle 90°	790 M K330
1	100	CMC07 01 15	CMC07 01 30	CMC07 01 45	CMC07 01 60	CMC07 01 75	CMC07 01 90	
2	185	CMC07 02 15	CMC07 02 30	CMC07 02 45	CMC07 02 60	CMC07 02 75	CMC07 02 90	
3	270	CMC07 03 15	CMC07 03 30	CMC07 03 45	CMC07 03 60	CMC07 03 75	CMC07 03 90	
4	355	CMC07 04 15	CMC07 04 30	CMC07 04 45	CMC07 04 60	CMC07 04 75	CMC07 04 90	
5	440	CMC07 05 15	CMC07 05 30	CMC07 05 45	CMC07 05 60	CMC07 05 75	CMC07 05 90	
6	525	CMC07 06 15	CMC07 06 30	CMC07 06 45	CMC07 06 60	CMC07 06 75	CMC07 06 90	
7	610	CMC07 07 15	CMC07 07 30	CMC07 07 45	CMC07 07 60	CMC07 07 75	CMC07 07 90	
8	695	CMC07 08 15	CMC07 08 30	CMC07 08 45	CMC07 08 60	CMC07 08 75	CMC07 08 90	

More than 8 tracks on request.

magnetic corner tracks

VERSION CMC04 / CMC08

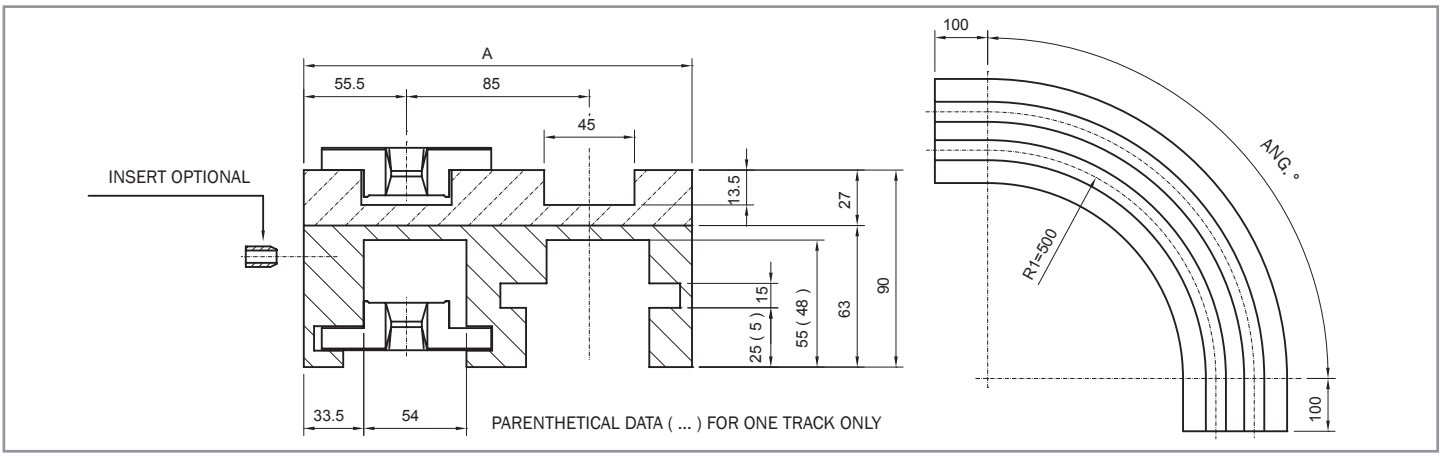

VERSION CMC04								CHAINS REF.
Nr. of Tracks	A	Curve angle 15°	Curve angle 30°	Curve angle 45°	Curve angle 60°	Curve angle 75°	Curve angle 90°	790 M K330
1	111	CMC04 01 15	CMC04 01 30	CMC04 01 45	CMC04 01 60	CMC04 01 75	CMC04 01 90	
2	196	CMC04 02 15	CMC04 02 30	CMC04 02 45	CMC04 02 60	CMC04 02 75	CMC04 02 90	
3	281	CMC04 03 15	CMC04 03 30	CMC04 03 45	CMC04 03 60	CMC04 03 75	CMC04 03 90	
4	366	CMC04 04 15	CMC04 04 30	CMC04 04 45	CMC04 04 60	CMC04 04 75	CMC04 04 90	
5	451	CMC04 05 15	CMC04 05 30	CMC04 05 45	CMC04 05 60	CMC04 05 75	CMC04 05 90	
6	536	CMC04 06 15	CMC04 06 30	CMC04 06 45	CMC04 06 60	CMC04 06 75	CMC04 06 90	
7	621	CMC04 07 15	CMC04 07 30	CMC04 07 45	CMC04 07 60	CMC04 07 75	CMC04 07 90	
8	706	CMC04 08 15	CMC04 08 30	CMC04 08 45	CMC04 08 60	CMC04 08 75	CMC04 08 90	

More than 8 tracks on request.

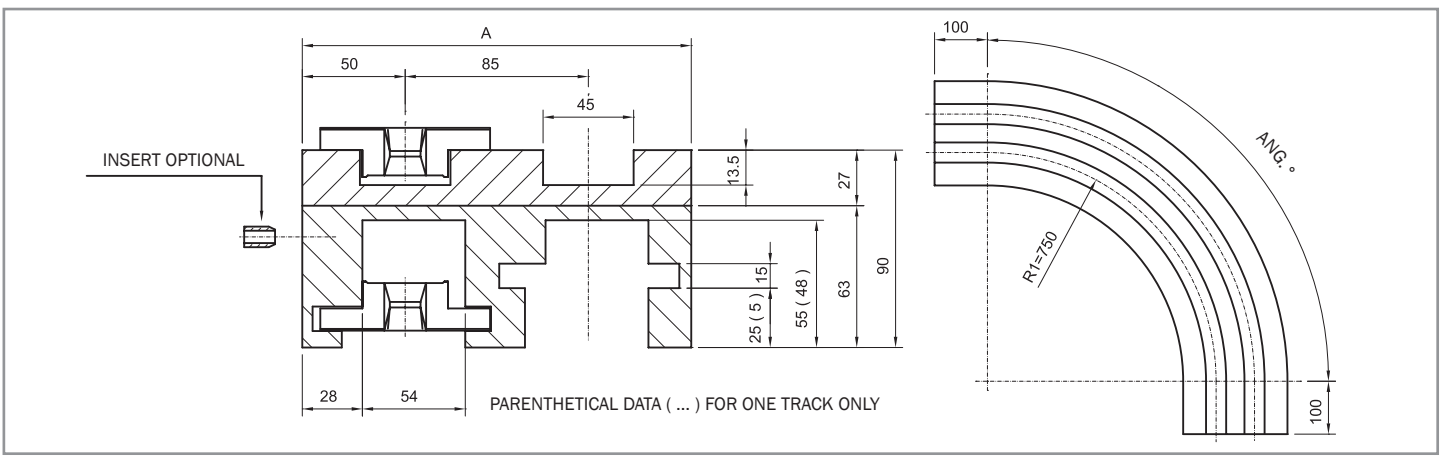

VERSION CMC08								CHAINS REF.
Nr. of Tracks	A	Curve angle 15°	Curve angle 30°	Curve angle 45°	Curve angle 60°	Curve angle 75°	Curve angle 90°	790 M K330
1	100	CMC08 01 15	CMC08 01 30	CMC08 01 45	CMC08 01 60	CMC08 01 75	CMC08 01 90	
2	185	CMC08 02 15	CMC08 02 30	CMC08 02 45	CMC08 02 60	CMC08 02 75	CMC08 02 90	
3	270	CMC08 03 15	CMC08 03 30	CMC08 03 45	CMC08 03 60	CMC08 03 75	CMC08 03 90	
4	355	CMC08 04 15	CMC08 04 30	CMC08 04 45	CMC08 04 60	CMC08 04 75	CMC08 04 90	
5	440	CMC08 05 15	CMC08 05 30	CMC08 05 45	CMC08 05 60	CMC08 05 75	CMC08 05 90	
6	525	CMC08 06 15	CMC08 06 30	CMC08 06 45	CMC08 06 60	CMC08 06 75	CMC08 06 90	
7	610	CMC08 07 15	CMC08 07 30	CMC08 07 45	CMC08 07 60	CMC08 07 75	CMC08 07 90	
8	695	CMC08 08 15	CMC08 08 30	CMC08 08 45	CMC08 08 60	CMC08 08 75	CMC08 08 90	

More than 8 tracks on request.

magnetic corner tracks

VERSION CMC05D / CMC21

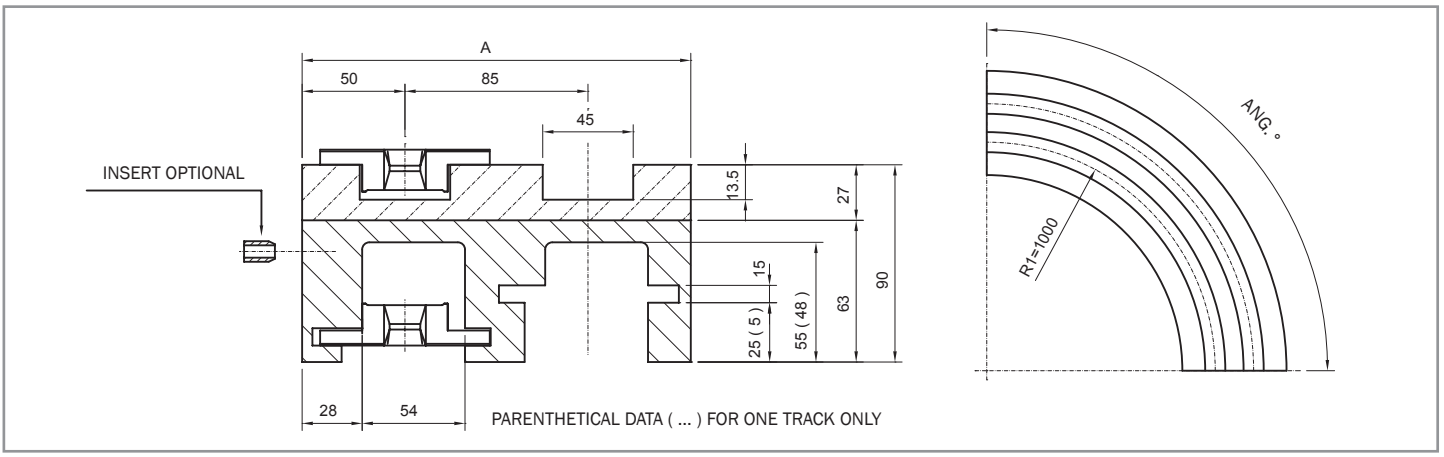

VERSION CMC05D								CHAINS REF.
Nr. of Tracks	A	Curve angle 15°	Curve angle 30°	Curve angle 45°	Curve angle 60°	Curve angle 75°	Curve angle 90°	790 M K330
1	100	CMC05D 01 15	CMC05D 01 30	CMC05D 01 45	CMC05D 01 60	CMC05D 01 75	CMC05D 01 90	
2	185	CMC05D 02 15	CMC05D 02 30	CMC05D 02 45	CMC05D 02 60	CMC05D 02 75	CMC05D 02 90	
3	270	CMC05D 03 15	CMC05D 03 30	CMC05D 03 45	CMC05D 03 60	CMC05D 03 75	CMC05D 03 90	
4	355	CMC05D 04 15	CMC05D 04 30	CMC05D 04 45	CMC05D 04 60	CMC05D 04 75	CMC05D 04 90	
5	440	CMC05D 05 15	CMC05D 05 30	CMC05D 05 45	CMC05D 05 60	CMC05D 05 75	CMC05D 05 90	
6	525	CMC05D 06 15	CMC05D 06 30	CMC05D 06 45	CMC05D 06 60	CMC05D 06 75	CMC05D 06 90	
7	610	CMC05D 07 15	CMC05D 07 30	CMC05D 07 45	CMC05D 07 60	CMC05D 07 75	CMC05D 07 90	
8	695	CMC05D 08 15	CMC05D 08 30	CMC05D 08 45	CMC05D 08 60	CMC05D 08 75	CMC05D 08 90	

More than 8 tracks on request.

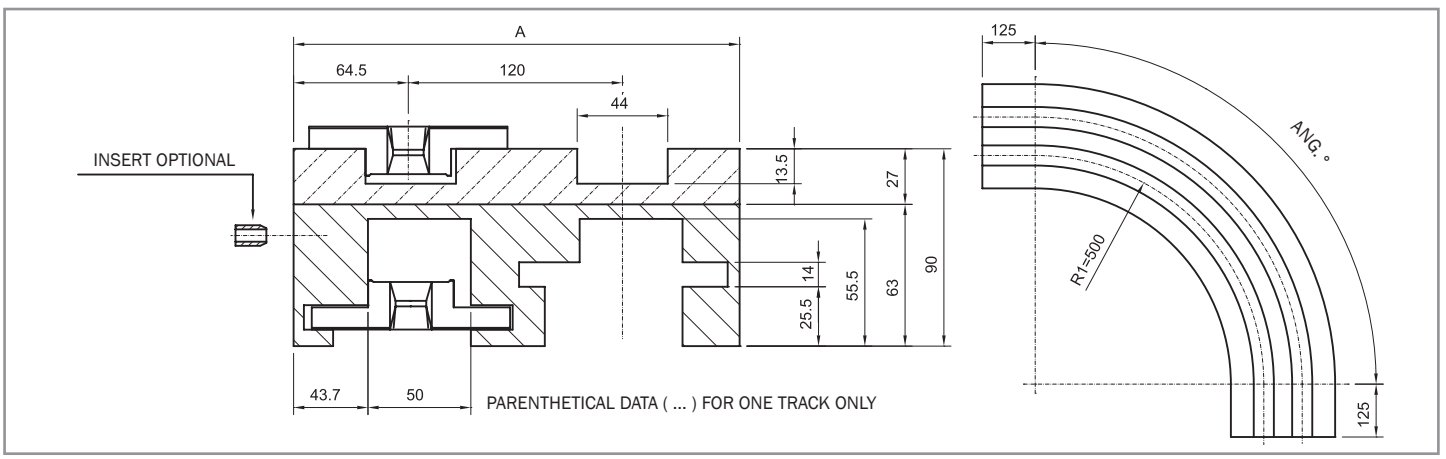

VERSION CMC21								CHAINS REF.
Nr. of Tracks	A	Curve angle 15°	Curve angle 30°	Curve angle 45°	Curve angle 60°	Curve angle 75°	Curve angle 90°	790 M K450
1	129	CMC21 01 15	CMC21 01 30	CMC21 01 45	CMC21 01 60	CMC21 01 75	CMC21 01 90	
2	249	CMC21 02 15	CMC21 02 30	CMC21 02 45	CMC21 02 60	CMC21 02 75	CMC21 02 90	
3	369	CMC21 03 15	CMC21 03 30	CMC21 03 45	CMC21 03 60	CMC21 03 75	CMC21 03 90	
4	489	CMC21 04 15	CMC21 04 30	CMC21 04 45	CMC21 04 60	CMC21 04 75	CMC21 04 90	

More than 4 tracks on request.

magnetic corner tracks

VERSION CMC22 / CMC27

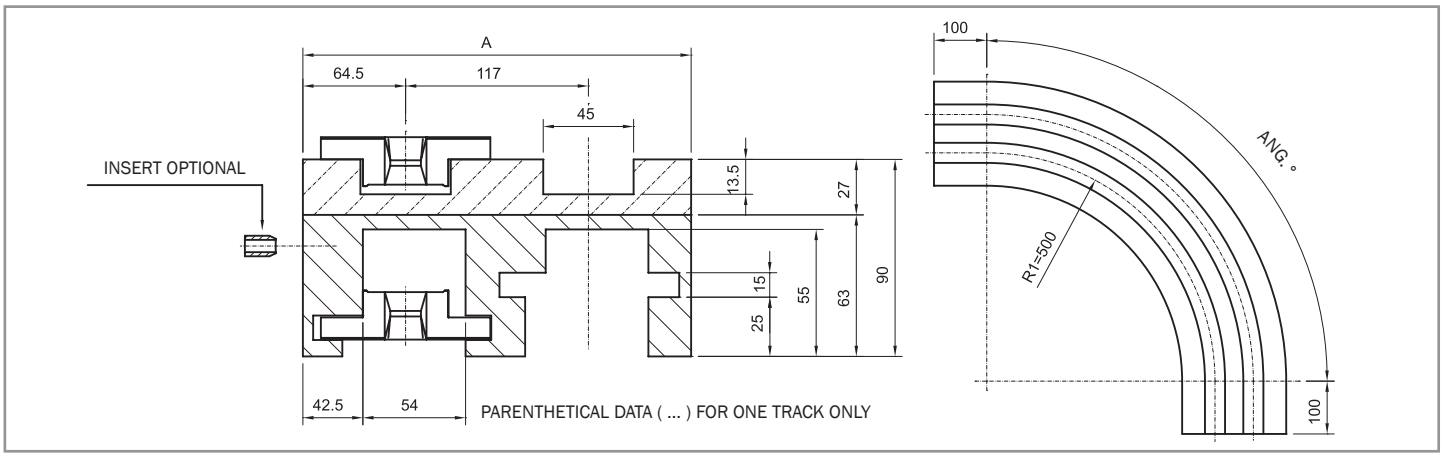

VERSION CMC22								CHAINS REF.
Nr. of Tracks	A	Curve angle 15°	Curve angle 30°	Curve angle 45°	Curve angle 60°	Curve angle 75°	Curve angle 90°	790 M K450
1	129	CMC22 01 15	CMC22 01 30	CMC22 01 45	CMC22 01 60	CMC22 01 75	CMC22 01 90	
2	246	CMC22 02 15	CMC22 02 30	CMC22 02 45	CMC22 02 60	CMC22 02 75	CMC22 02 90	
3	363	CMC22 03 15	CMC22 03 30	CMC22 03 45	CMC22 03 60	CMC22 03 75	CMC22 03 90	
4	480	CMC22 04 15	CMC22 04 30	CMC22 04 45	CMC22 04 60	CMC22 04 75	CMC22 04 90	

More than 4 tracks on request.

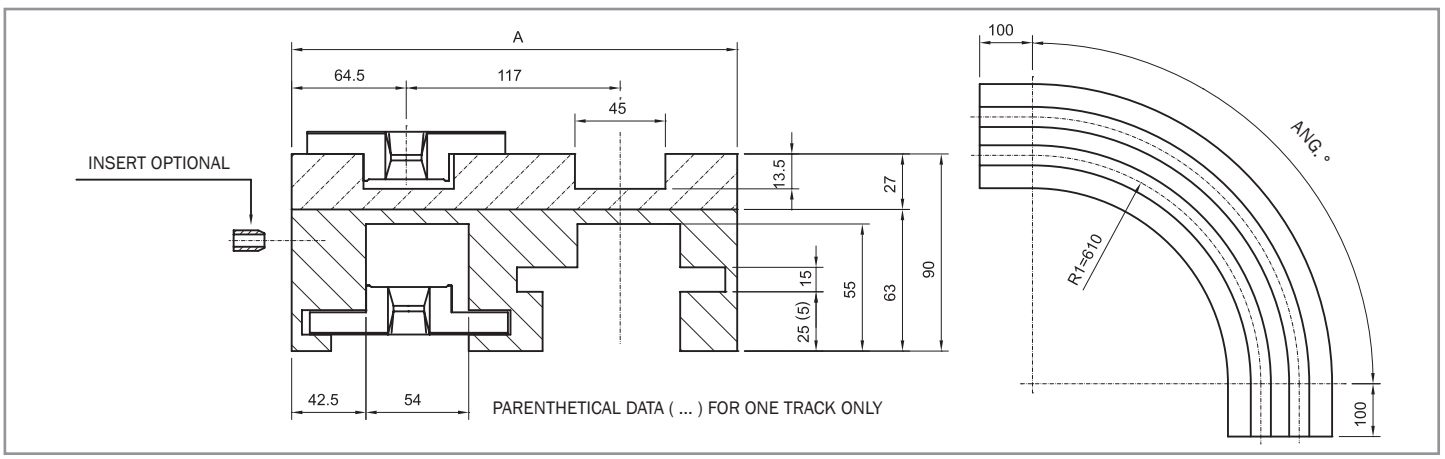

VERSION CMC27								CHAINS REF.
Nr. of Tracks	A	Curve angle 15°	Curve angle 30°	Curve angle 45°	Curve angle 60°	Curve angle 75°	Curve angle 90°	790 M K450
1	129	CMC27 01 15	CMC27 01 30	CMC27 01 45	CMC27 01 60	CMC27 01 75	CMC27 01 90	
2	246	CMC27 02 15	CMC27 02 30	CMC27 02 45	CMC27 02 60	CMC27 02 75	CMC27 02 90	
3	363	CMC27 03 15	CMC27 03 30	CMC27 03 45	CMC27 03 60	CMC27 03 75	CMC27 03 90	
4	480	CMC27 04 15	CMC27 04 30	CMC27 04 45	CMC27 04 60	CMC27 04 75	CMC27 04 90	

More than 4 tracks on request.

magnetic corner tracks

RETURN GUIDE

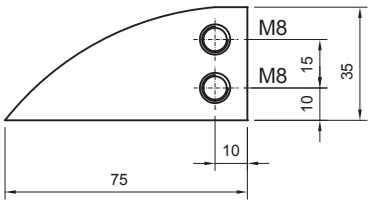

M8 BRASS INSERT, M10 ON REQUEST.

M8 brass insert, M10 on request.

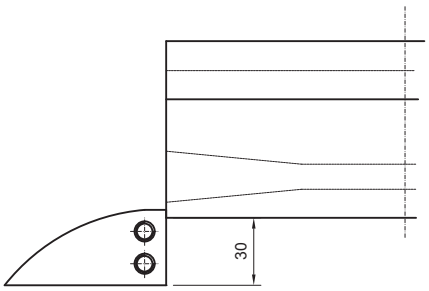

Return guide shoe for curve
with return part at same level.

Return guide shoe for curve with return part at same level.

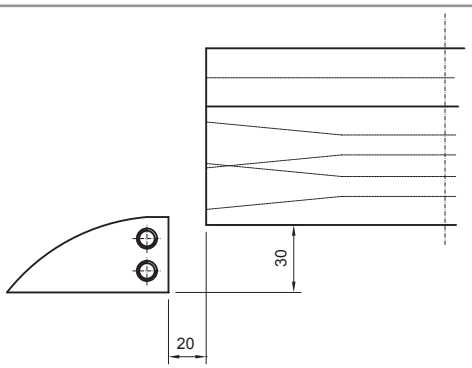

Return guide shoe for curve
with staggered return part.

Return guide shoe for curve with staggered return part.

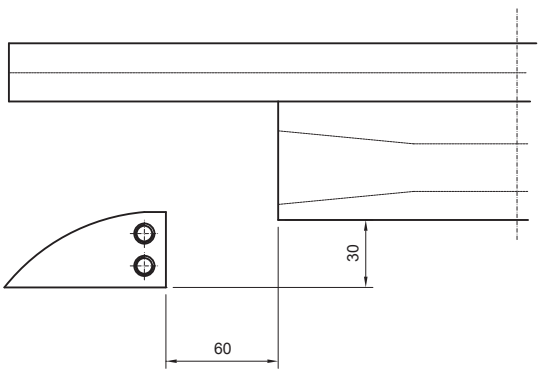

Return guide shoe for curve
CM6 - CMC6 - CMC21 series.
(780 M - 790 M chains series)

Return guide shoe for curve CM6 - CMC6 - CMC21 series (780 M - 790 M chains series).

notes

Every care has been taken to ensure the accuracy of the information contained in this catalogue
but no liability can be accepted for any errors or omissions.

Adeptrans Cadenas y Transmisiones S.L.

Accessories
ED01

MakesMoving

916 926 286 · info@adeptrans.es

machined sprockets

812 / 815 / 881 M SERIES



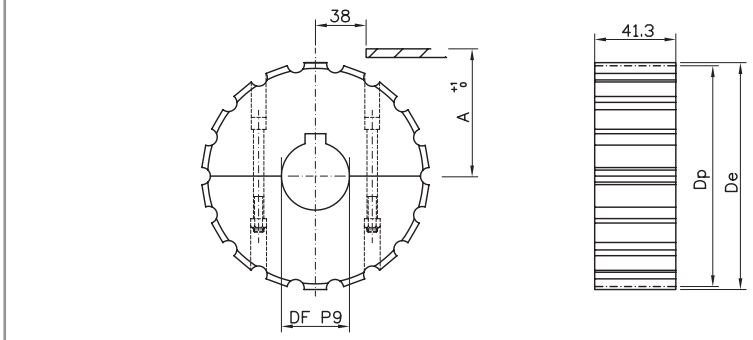

Split sprockets

material: polyamide - screws in stainless steel - UNI 6604 - 69 key seat

DIMENSIONS				PRODUCT CODE				
Z	De	Dp	A	DF 18*	DF 25	DF 30	DF 35	DF 40
17	103.9	105.47	55.9	S11017 18	S11017 25	S11017 30	S11017 35	S11017 40
19	117.0	117.34	61.9	S11019 18	S11019 25	S11019 30	S11019 35	S11019 40
21	129.0	129.26	67.8	S11021 18	S11021 25	S11021 30	S11021 35	S11021 40
23	142.0	141.21	73.8	S11023 18	S11023 25	S11023 30	S11023 35	S11023 40
25	154.0	153.21	79.8	S11025 18	S11025 25	S11025 30	S11025 35	S11025 40
27	166.8	165.21	85.8	S11027 18	S11027 25	S11027 30	S11027 35	S11027 40
29	178.5	177.24	91.8	S11029 18	S11029 25	S11029 30	S11029 35	S11029 40

* plain bore



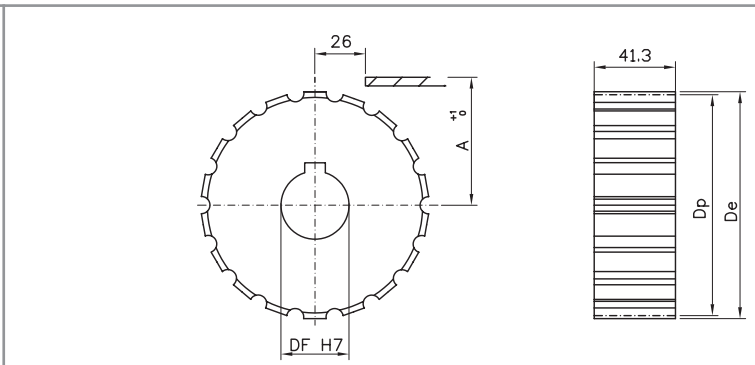

Standard sprockets

material: polyamide - UNI 6604 - 69 key seat

DIMENSIONS				PRODUCT CODE			
Z	De	Dp	A	DF 25	DF 30	DF 35	DF 40
17	103.9	105.47	55.9	S01017 25	S01017 30	S01017 35	S01017 40
19	117.0	117.34	61.9	S01019 25	S01019 30	S01019 35	S01019 40
21	129.0	129.26	67.8	S01021 25	S01021 30	S01021 35	S01021 40
23	142.0	141.21	73.8	S01023 25	S01023 30	S01023 35	S01023 40
25	154.0	153.21	79.8	S01025 25	S01025 30	S01025 35	S01025 40
27	166.8	165.21	85.8	S01027 25	S01027 30	S01027 35	S01027 40
29	178.5	177.24	91.8	S01029 25	S01029 30	S01029 35	S01029 40

machined idler wheels

812 / 815 / 881 M SERIES



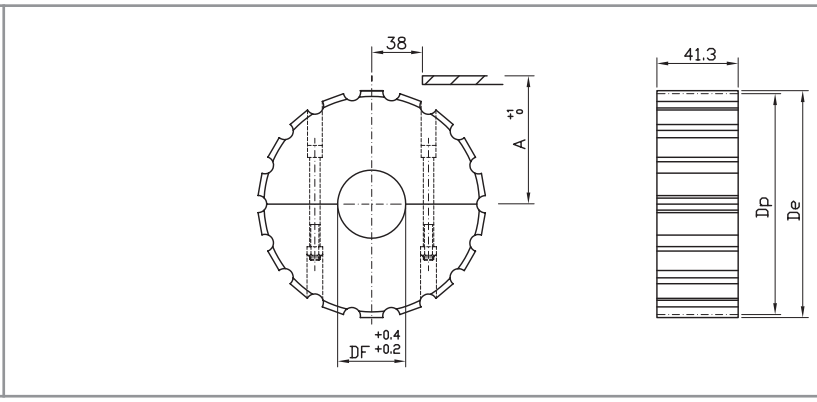

Split idler wheels
material: polyamide - screws in stainless steel

DIMENSIONS				PRODUCT CODE			
Z	De	Dp	A	DF 25	DF 30	DF 35	DF 40
17	103.9	105.47	55.9	R11017 25	R11017 30	R11017 35	R11017 40
19	117.0	117.34	61.9	R11019 25	R11019 30	R11019 35	R11019 40
21	129.0	129.26	67.8	R11021 25	R11021 30	R11021 35	R11021 40
23	142.0	141.21	73.8	R11023 25	R11023 30	R11023 35	R11023 40
25	154.0	153.21	79.8	R11025 25	R11025 30	R11025 35	R11025 40
27	166.8	165.21	85.8	R11027 25	R11027 30	R11027 35	R11027 40
29	178.5	177.24	91.8	R11029 25	R11029 30	R11029 35	R11029 40



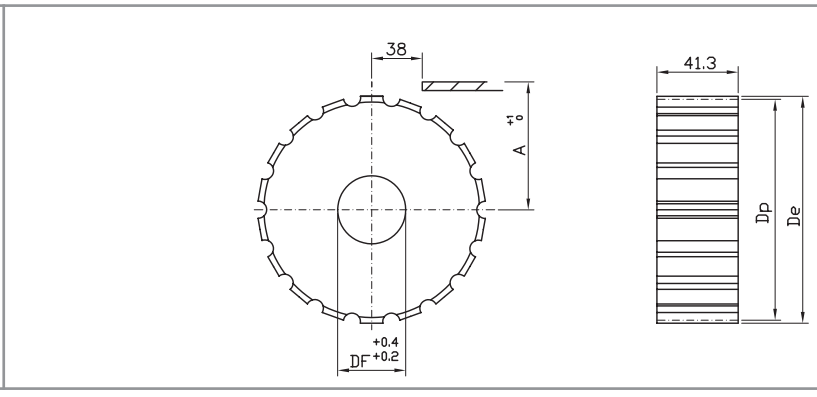

Standard idler wheels
material: polyamide

DIMENSIONS				PRODUCT CODE			
Z	De	Dp	A	DF 25	DF 30	DF 35	DF 40
17	103.9	105.47	55.9	R01017 25	R01017 30	R01017 35	R01017 40
19	117.0	117.34	61.9	R01019 25	R01019 30	R01019 35	R01019 40
21	129.0	129.26	67.8	R01021 25	R01021 30	R01021 35	R01021 40
23	142.0	141.21	73.8	R01023 25	R01023 30	R01023 35	R01023 40
25	154.0	153.21	79.8	R01025 25	R01025 30	R01025 35	R01025 40
27	166.8	165.21	85.8	R01027 25	R01027 30	R01027 35	R01027 40
29	178.5	177.24	91.8	R01029 25	R01029 30	R01029 35	R01029 40

machined idler wheels

812 / 815 / 881 M SERIES



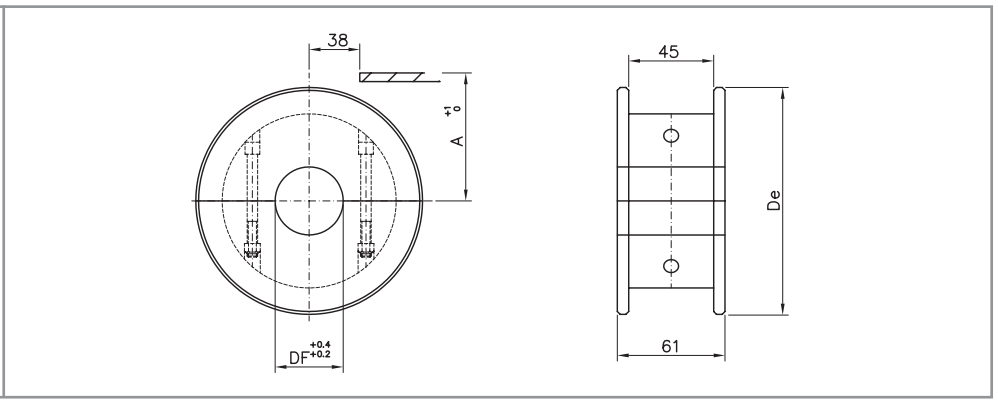

Split idler wheels
material: polyamide - screws in stainless steel

DIMENSIONS			PRODUCT CODE				
Z eq.	De	A	DF 20	DF 25	DF 30	DF 35	DF 40
17	104.0	56.2	P11617 20	P11617 25	P11617 30	P11617 35	P11617 40
19	117.0	62.6	P11619 20	P11619 25	P11619 30	P11619 35	P11619 40
21	129.8	68.6	P11621 20	P11621 25	P11621 30	P11621 35	P11621 40
23	142.2	74.6	P11623 20	P11623 25	P11623 30	P11623 35	P11623 40
25	154.7	80.5	P11625 20	P11625 25	P11625 30	P11625 35	P11625 40
27	167.2	88.5	P11627 20	P11627 25	P11627 30	P11627 35	P11627 40
29	179.3	92.8	P11629 20	P11629 25	P11629 30	P11629 35	P11629 40



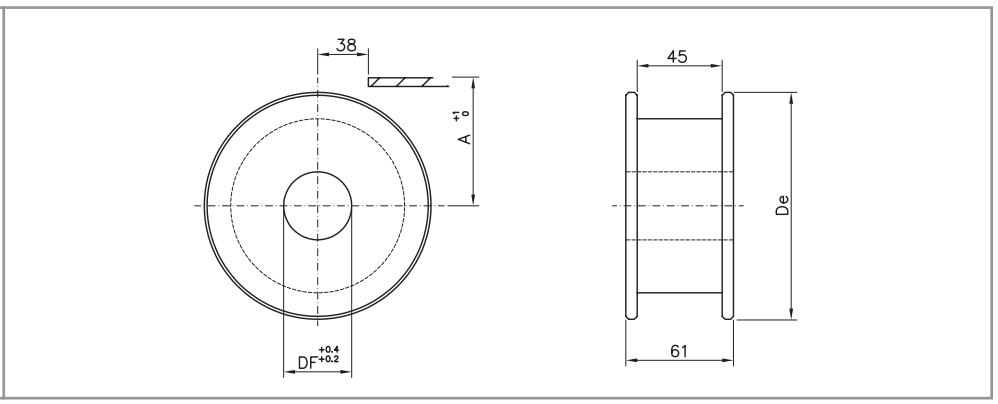

Standard idler wheels
material: polyamide

DIMENSIONS			PRODUCT CODE				
Z eq.	De	A	DF 20	DF 25	DF 30	DF 35	DF 40
17	104.0	56.2	P01617 20	P01617 25	P01617 30	P01617 35	P01617 40
19	117.0	62.6	P01619 20	P01619 25	P01619 30	P01619 35	P01619 40
21	129.8	68.6	P01621 20	P01621 25	P01621 30	P01621 35	P01621 40
23	142.2	74.6	P01623 20	P01623 25	P01623 30	P01623 35	P01623 40
25	154.7	80.5	P01625 20	P01625 25	P01625 30	P01625 35	P01625 40
27	167.2	88.5	P01627 20	P01627 25	P01627 30	P01627 35	P01627 40
29	179.3	92.8	P01629 20	P01629 25	P01629 30	P01629 35	P01629 40

injected sprockets and idler wheels

812 / 815 / 881 M SERIES



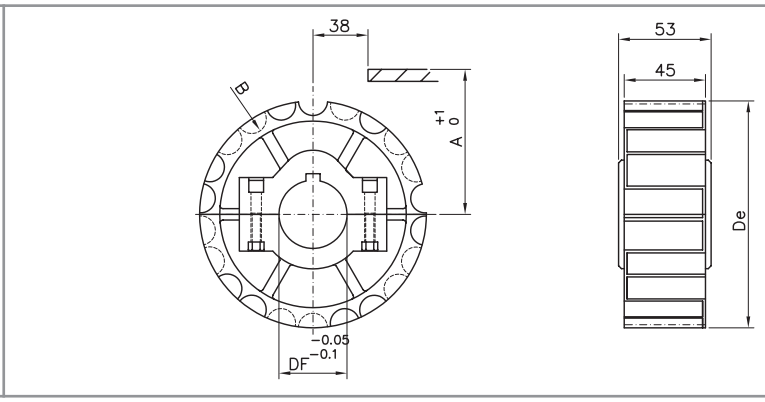

Split sprockets

material: reinforced polyamide - screws in stainless steel, nuts in nickel plated brass - UNI 6604 - 69 key seat

DIMENSIONS				PRODUCT CODE				
Z	De	A	B	DF 25	DF 30	DF 35	DF 40	DF 45
21	129.0	67.8	116.1	S10021 25	S10021 30	S10021 35	S10021 40	S10021 45
23	142.0	73.8	128.1	S10023 25	S10023 30	S10023 35	S10023 40	S10023 45
25	154.0	79.8	140.1	S10025 25	S10025 30	S10025 35	S10025 40	S10025 45



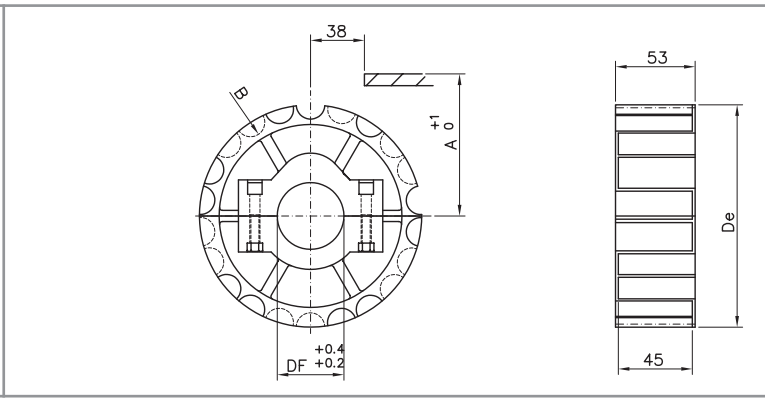

Split idler wheels

material: polyamide - screws in stainless steel, nuts in nickel plated brass

DIMENSIONS				PRODUCT CODE				
Z	De	A	B	DF 25	DF 30	DF 35	DF 40	DF 45
21	129.0	67.8	116.1	R10021 25	R10021 30	R10021 35	R10021 40	R10021 45
23	142.0	73.8	128.1	R10023 25	R10023 30	R10023 35	R10023 40	R10023 45
25	154.0	79.8	140.1	R10025 25	R10025 30	R10025 35	R10025 40	R10025 45

injected sprockets and idler wheels

812 / 815 / 881 M SERIES



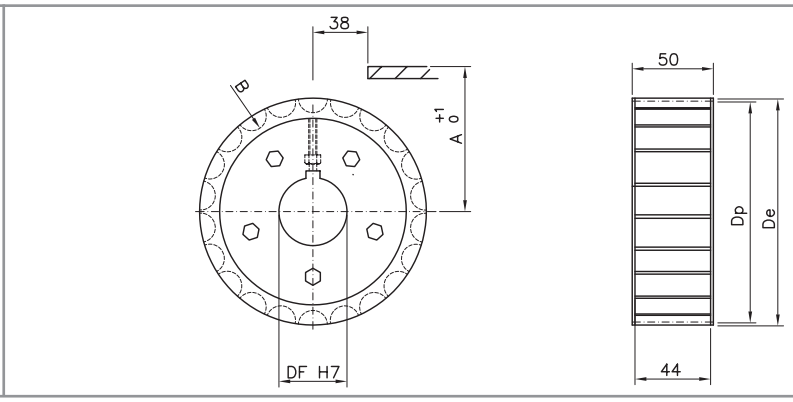

Drive sprockets

material: reinforced polyamide - screws in stainless steel - UNI 6604 - 69 key seat

DIMENSIONS					PRODUCT CODE			
Z	De	Dp	A	B	DF 25	DF 30	DF 35	DF 40
15	92.2	93.67	/	/	S00015 25	S00015 30	/	/
17	104.7	105.48	/	/	S00017 25	S00017 30	/	/
19	117.0	117.34	61.9	104.2	S00019 25	S00019 30	S00019 35	S00019 40
21	129.0	129.26	67.8	116.1	S00021 25	S00021 30	S00021 35	S00021 40
23	142.0	141.21	73.8	128.1	S00023 25	S00023 30	S00023 35	S00023 40
25	154.0	153.21	79.8	140.1	S00025 25	S00025 30	S00025 35	S00025 40



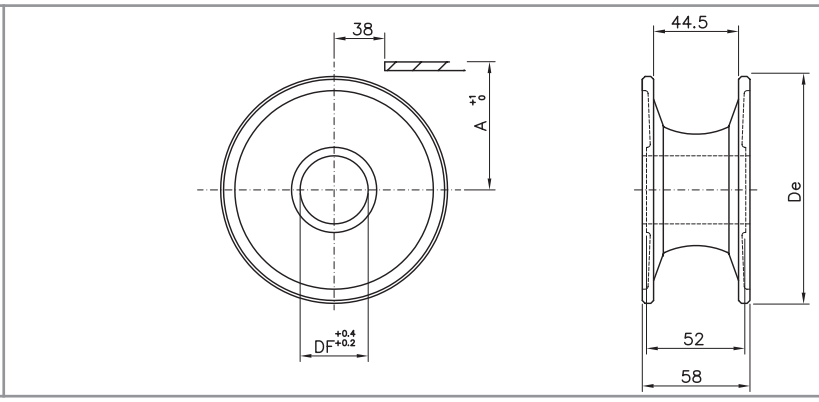

Standard idler wheels reinforced series

material: self lubricating polyamide / colour: black

DIMENSIONS			PRODUCT CODE				
Z eq.	De	A	DF 20	DF 25	DF 30	DF 35	DF 40
15	95.5	92.0	/	P00615 25	P00615 30	/	/
17	106.5	57.0	/	P00617 25	P00617 30	/	/
18	113.0	92.0	/	P00618 25	P00618 30	/	/
19	117.0	62.6	P00619 20	P00619 25	P00619 30	P00619 35	P00619 40
21	129.8	68.6	P00621 20	P00621 25	P00621 30	P00621 35	P00621 40
23	142.2	74.6	P00623 20	P00623 25	P00623 30	P00623 35	P00623 40
25	154.7	80.5	P00625 20	P00625 25	P00625 30	P00625 35	P00625 40

injected idler wheels

812 / 815 / 881 M SERIES



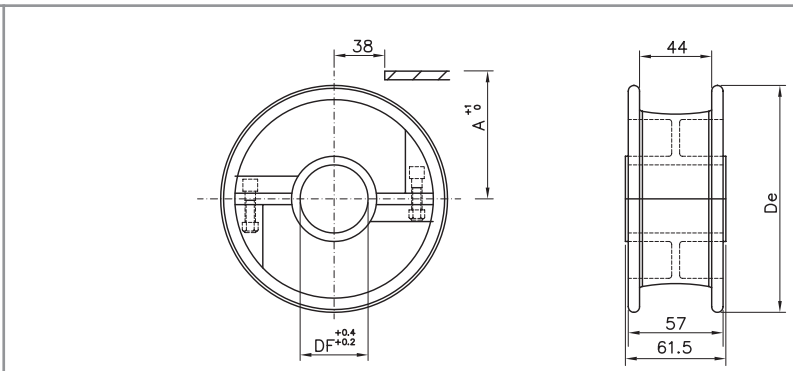

Self lubricating split idler wheels
material: self lubricating polyamide - screws in stainless steel / colour: black

DIMENSIONS			PRODUCT CODE			
Z eq.	De	A	DF 25	DF 30	DF 35	DF 40
21	130	48.2	P10621 25	P10621 30	P10621 35	P10621 40
23	142.5	74.6	P10623 25	P10623 30	P10623 35	P10623 40
25	154.5	80.5	P10625 25	P10625 30	P10625 35	P10625 40



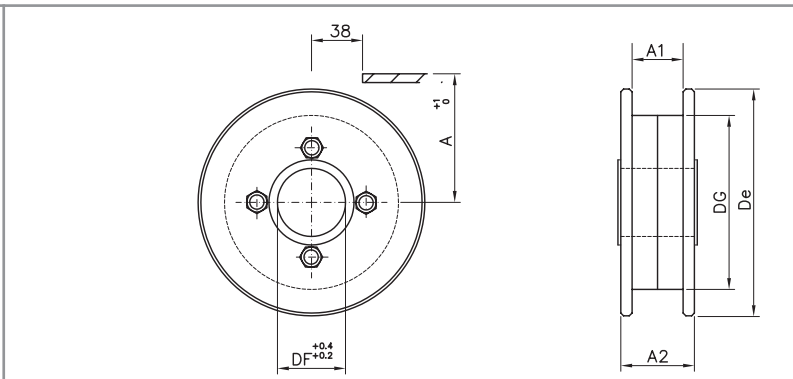

Standard idler wheels reinforced series
material: self lubricating polyamide / colour: black

DIMENSIONS						PRODUCT CODE				
Z eq.	De	DG	A	A1	A2	DF 25	DF 30	DF 35	DF 40	DF 45
15	90.0	58.0	48.2	48.0	83.0	/	K00615 30	K00615 35	K00615 40	K00615 45
17	106.0	71.0	56.2	44.0	52.0	K00617 25	K00617 30	/	/	/
19	118.0	80.0	62.6	44.0	60.0	K00619 25	K00619 30	K00619 35	K00619 40	/
21	129.8	80.0	68.6	44.0	60.0	K00621 25	K00621 30	K00621 35	K00621 40	/
23	142.5	108.0	74.6	44.0	60.0	K00623 25	K00623 30	K00623 35	K00623 40	/
25	155.0	108.0	80.5	44.0	60.0	K00625 25	K00625 30	K00625 35	K00625 40	/

machined sprockets

512 SERIES



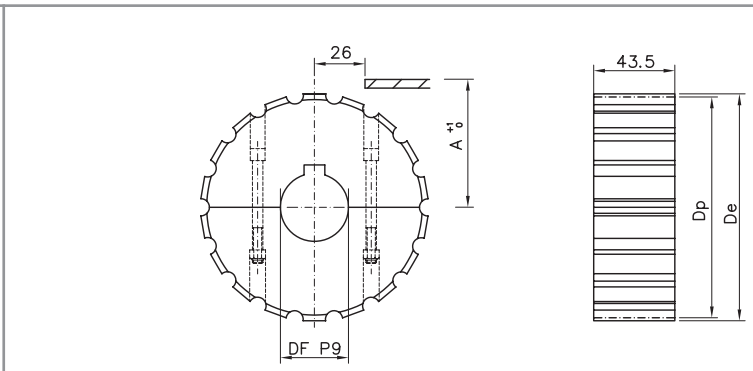

Split sprockets
material: polyamide - screws in stainless steel - nuts in zinc plated steel - UNI 6604 - 69 key seat

DIMENSIONS				PRODUCT CODE			
Z	De	Dp	A	DF 25	DF 30	DF 35	DF 40
13	106.1	108.0	57.2	S11513 25	S11513 30	S11513 35	S11513 40
15	122.2	124.0	65.2	S11515 25	S11515 30	S11515 35	S11515 40
17	138.2	138.2	72.3	S11517 25	S11517 30	S11517 35	S11517 40
18	146.4	146.3	76.4	S11518 25	S11518 30	S11518 35	S11518 40
19	155.7	154.3	80.4	S11519 25	S11519 30	S11519 35	S11519 40
21	173.0	170.4	88.4	S11521 25	S11521 30	S11521 35	S11521 40
23	190.0	186.5	96.5	S11523 25	S11523 30	S11523 35	S11523 40
25	204.0	202.7	104.6	S11525 25	S11525 30	S11525 35	S11525 40



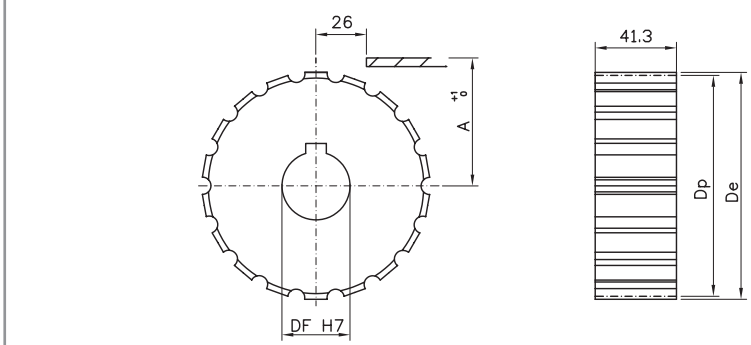

Standard sprockets
material: polyamide - UNI 6604 - 69 key seat

DIMENSIONS				PRODUCT CODE			
Z	De	Dp	A	DF 25	DF 30	DF 35	DF 40
13	106.1	108.0	57.2	S01513 25	S01513 30	S01513 35	S01513 40
15	122.2	124.0	65.2	S01515 25	S01515 30	S01515 35	S01515 40
17	138.2	138.2	72.3	S01517 25	S01517 30	S01517 35	S01517 40
18	146.4	146.3	76.4	S01518 25	S01518 30	S01518 35	S01518 40
19	155.7	154.3	80.4	S01519 25	S01519 30	S01519 35	S01519 40
21	173.0	170.4	88.4	S01521 25	S01521 30	S01521 35	S01521 40
23	190.0	186.5	96.5	S01523 25	S01523 30	S01523 35	S01523 40
25	204.0	202.7	104.6	S01525 25	S01525 30	S01525 35	S01525 40

machined idler wheels

512 SERIES



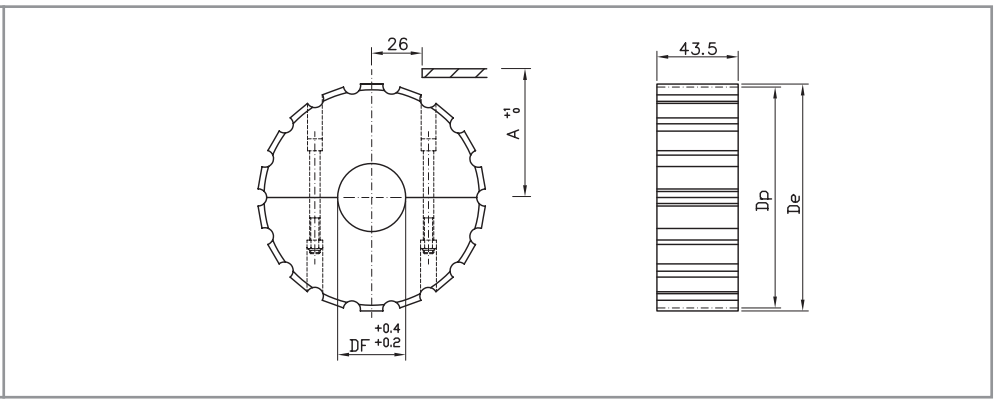

Split idler wheels

material: polyamide - screws in stainless steel, nuts in zinc plated steel

DIMENSIONS				PRODUCT CODE				
Z	De	Dp	A	DF 18*	DF 25	DF 30	DF 35	DF 40
13	106.1	108.0	57.2	R11513 18	R11513 25	R11513 30	R11513 35	R11513 40
15	122.2	124.0	65.2	R11515 18	R11515 25	R11515 30	R11515 35	R11515 40
17	138.2	138.2	72.3	R11517 18	R11517 25	R11517 30	R11517 35	R11517 40
18	146.4	146.3	76.4	R11518 18	R11518 25	R11518 30	R11518 35	R11518 40
19	155.7	154.3	80.4	R11519 18	R11519 25	R11519 30	R11519 35	R11519 40
21	173.0	170.4	88.4	R11521 18	R11521 25	R11521 30	R11521 35	R11521 40
23	190.0	186.5	96.5	R11523 18	R11523 25	R11523 30	R11523 35	R11523 40
25	204.0	202.7	104.6	R11525 18	R11525 25	R11525 30	R11525 35	R11525 40

* plain bore



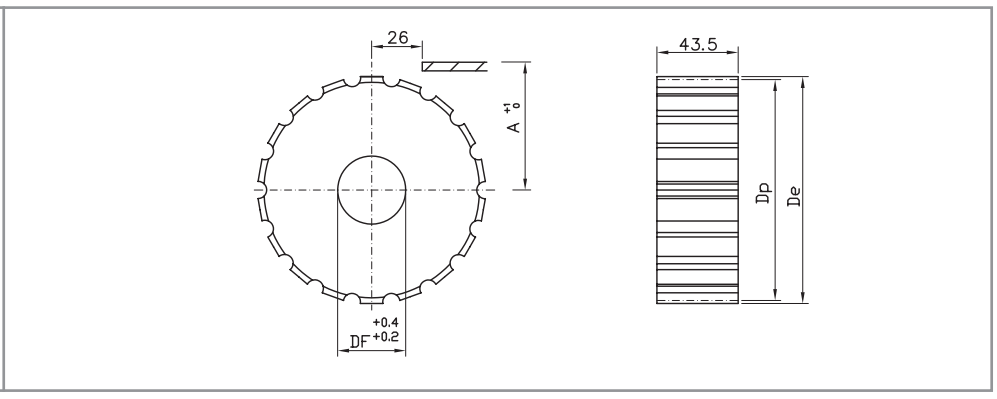

Standard idler wheels

material: polyamide

DIMENSIONS				PRODUCT CODE				
Z	De	Dp	A	DF 18*	DF 25	DF 30	DF 35	DF 40
13	106.1	108.0	57.2	R01513 18	R01513 25	R01513 30	R01513 35	R01513 40
15	122.2	124.0	65.2	R01515 18	R01515 25	R01515 30	R01515 35	R01515 40
17	138.2	138.2	72.3	R01517 18	R01517 25	R01517 30	R01517 35	R01517 40
18	146.4	146.3	76.4	R01518 18	R01518 25	R01518 30	R01518 35	R01518 40
19	155.7	154.3	80.4	R01519 18	R01519 25	R01519 30	R01519 35	R01519 40
21	173.0	170.4	88.4	R01521 18	R01521 25	R01521 30	R01521 35	R01521 40
23	190.0	186.5	96.5	R01523 18	R01523 25	R01523 30	R01523 35	R01523 40
25	204.0	202.7	104.6	R01525 18	R01525 25	R01525 30	R01525 35	R01525 40

* plain bore

machined sprockets

815 MINI SERIES



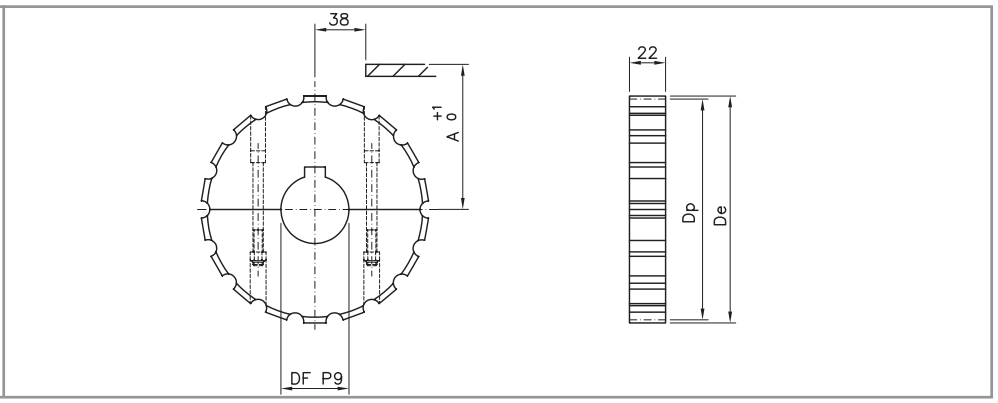

Split sprockets
material: polyamide - screws in stainless steel - UNI 6604 - 69 key seat

DIMENSIONS				PRODUCT CODE				
Z	De	Dp	A	DF 18*	DF 25	DF 30	DF 35	DF 40
19	117.0	117.34	61.9	S11119 18	S11119 25	S11119 30	S11119 35	S11119 40
21	129.0	129.26	67.8	S11121 18	S11121 25	S11121 30	S11121 35	S11121 40
23	142.0	141.21	73.8	S11123 18	S11123 25	S11123 30	S11123 35	S11123 40
25	154.0	153.21	79.8	S11125 18	S11125 25	S11125 30	S11125 35	S11125 40

* plain bore



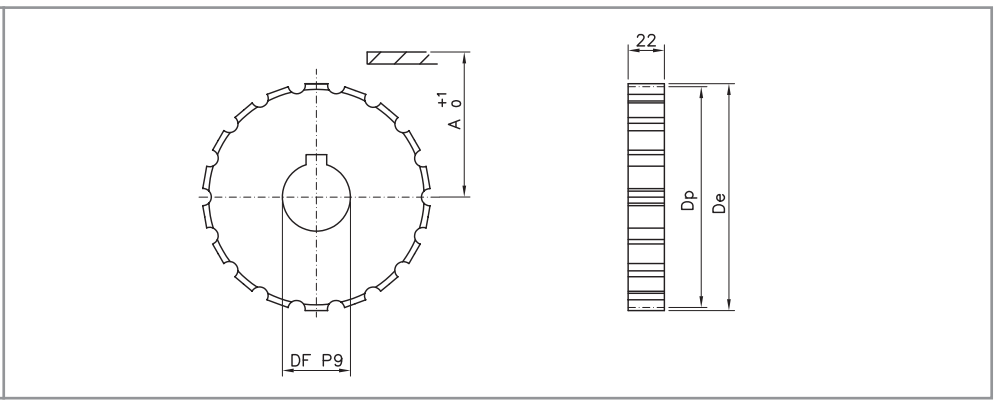

Standard sprockets
material: polyamide - UNI 6604 - 69 key seat

DIMENSIONS				PRODUCT CODE			
Z	De	Dp	A	DF 25	DF 30	DF 35	DF 40
19	117.0	117.34	61.9	S01119 25	S01119 30	S01119 35	S01119 40
21	129.0	129.26	67.8	S01121 25	S01121 30	S01121 35	S01121 40
23	142.0	141.21	73.8	S01123 25	S01123 30	S01123 35	S01123 40
25	154.0	153.21	79.8	S01125 25	S01125 30	S01125 35	S01125 40

machined idler wheels

815 MINI SERIES



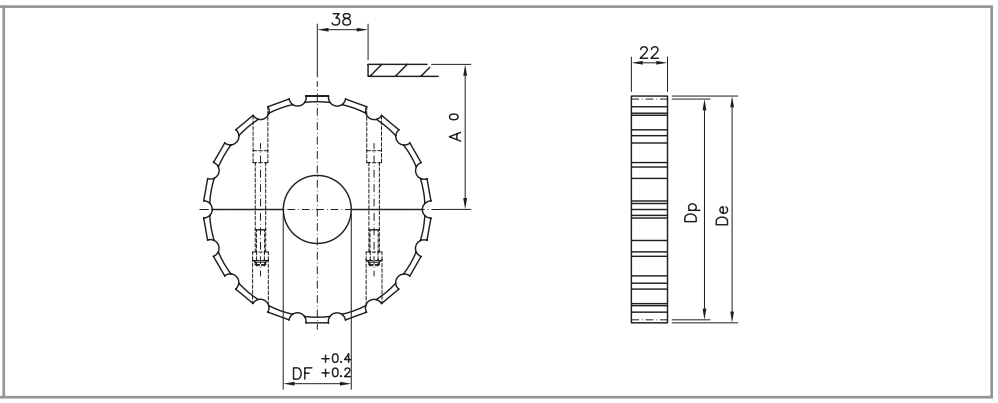

Split idler wheels
material: polyamide - screws in stainless steel - UNI 6604 - 69 key seat

DIMENSIONS				PRODUCT CODE			
Z	De	Dp	A	DF 25	DF 30	DF 35	DF 40
19	117.0	117.34	61.9	R11119 25	R11119 30	R11119 35	R11119 40
21	129.0	129.26	67.8	R11121 25	R11121 30	R11121 35	R11121 40
23	142.0	141.21	73.8	R11123 25	R11123 30	R11123 35	R11123 40
25	154.0	153.21	79.8	R11125 25	R11125 30	R11125 35	R11125 40



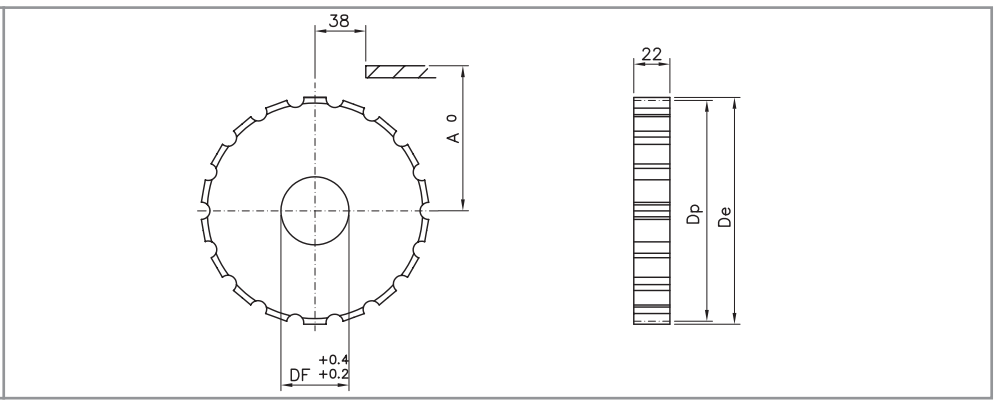

Standard idler wheels
material: polyamide - UNI 6604 - 69 key seat

DIMENSIONS				PRODUCT CODE			
Z	De	Dp	A	DF 25	DF 30	DF 35	DF 40
19	117.0	117.34	61.9	R01119 25	R01119 30	R01119 35	R01119 40
21	129.0	129.26	67.8	R01121 25	R01121 30	R01121 35	R01121 40
23	142.0	141.21	73.8	R01123 25	R01123 30	R01123 35	R01123 40
25	154.0	153.21	79.8	R01125 25	R01125 30	R01125 35	R01125 40

machined idler wheels

815 MINI SERIES



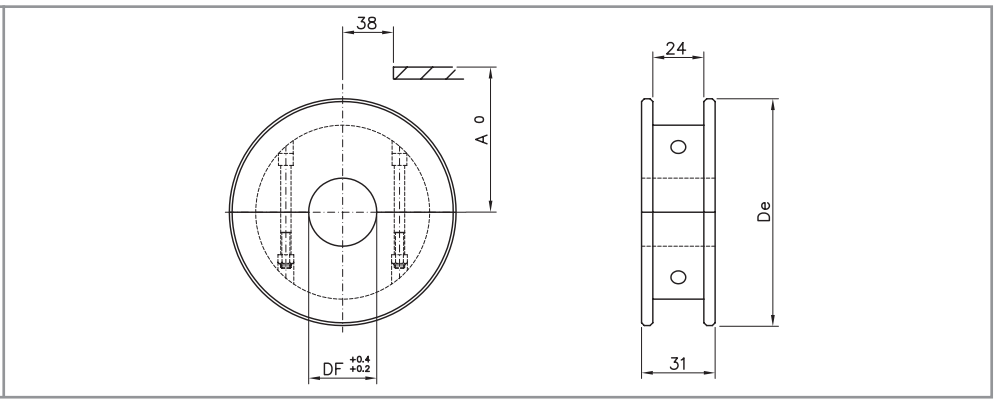

Split idler wheels
material: polyamide - screws in stainless steel

DIMENSIONS			PRODUCT CODE				
Z eq.	De	A	DF 20	DF 25	DF 30	DF 35	DF 40
19	117.0	62.6	P11119 20	P11119 25	P11119 30	P11119 35	P11119 40
21	129.8	68.6	P11121 20	P11121 25	P11121 30	P11121 35	P11121 40
23	142.2	74.6	P11123 20	P11123 25	P11123 30	P11123 35	P11123 40
25	154.7	80.5	P11125 20	P11125 25	P11125 30	P11125 35	P11125 40



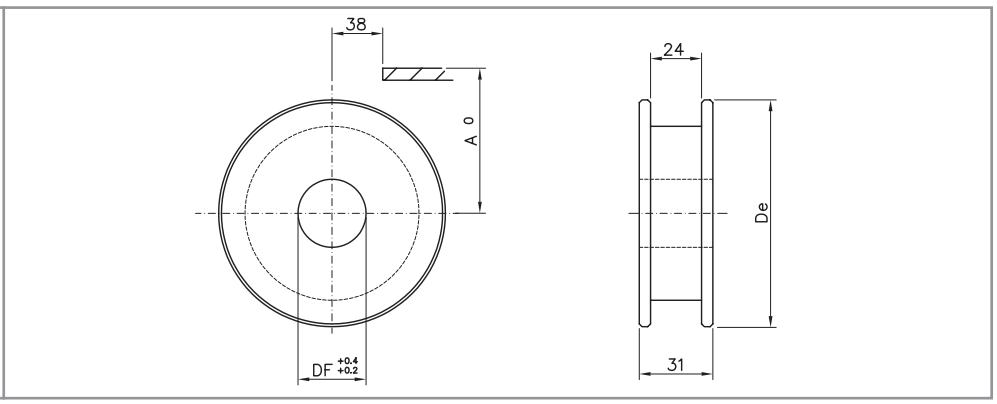

Standard idler wheels
material: polyamide

DIMENSIONS			PRODUCT CODE				
Z eq.	De	A	DF 20	DF 25	DF 30	DF 35	DF 40
19	117.0	62.6	P01119 20	P01119 25	P01119 30	P01119 35	P01119 40
21	129.8	68.6	P01121 20	P01121 25	P01121 30	P01121 35	P01121 40
23	142.2	74.6	P01123 20	P01123 25	P01123 30	P01123 35	P01123 40
25	154.7	80.5	P01125 20	P01125 25	P01125 30	P01125 35	P01125 40

machined sprockets

802 / 804 / 805 SERIES



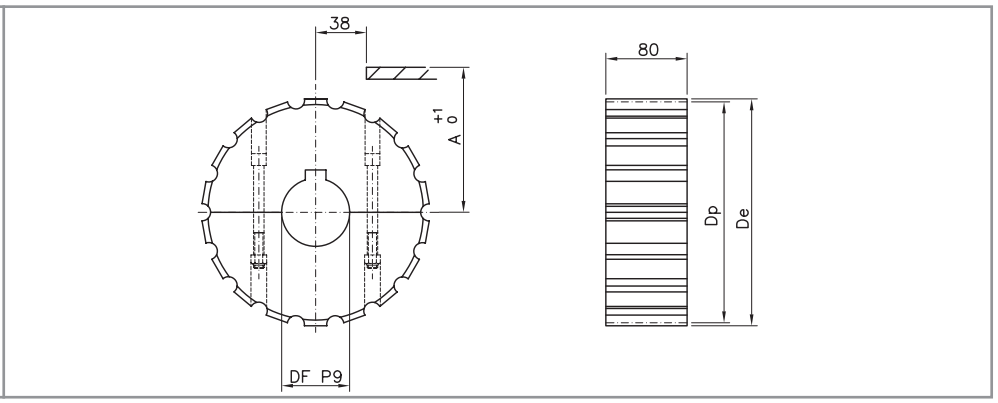

Split sprockets

material: polyamide - screws in stainless steel - UNI 6604-69 key seat

DIMENSIONS				PRODUCT CODE				
Z	De	Dp	A	DF 18*	DF 25	DF 30	DF 35	DF 40
19	117.0	117.34	61.9	S11719 18	S11719 25	S11719 30	S11719 35	S11719 40
21	129.0	129.26	67.8	S11721 18	S11721 25	S11721 30	S11721 35	S11721 40
23	142.0	141.21	73.8	S11723 18	S11723 25	S11723 30	S11723 35	S11723 40
25	154.0	153.21	79.8	S11725 18	S11725 25	S11725 30	S11725 35	S11725 40
27	166.8	165.20	85.8	S11727 18	S11727 25	S11727 30	S11727 35	S11727 40
29	178.5	177.24	91.8	S11729 18	S11729 25	S11729 30	S11729 35	S11729 40

* plain bore



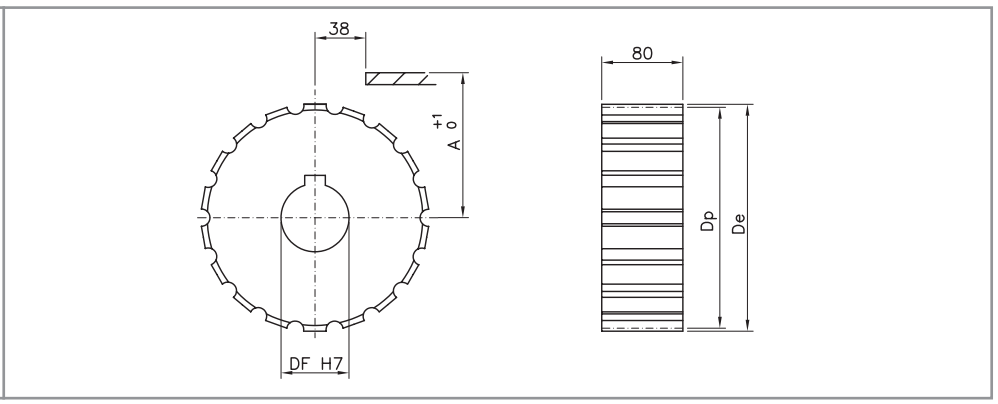

Standard sprockets

material: polyamide - UNI 6604-69 key seat

DIMENSIONS				PRODUCT CODE			
Z	De	Dp	A	DF 25	DF 30	DF 35	DF 40
19	117.0	117.34	61.9	S01719 25	S01719 30	S01719 35	S01719 40
21	129.0	129.26	67.8	S01721 25	S01721 30	S01721 35	S01721 40
23	142.0	141.21	73.8	S01723 25	S01723 30	S01723 35	S01723 40
25	154.0	153.21	79.8	S01725 25	S01725 30	S01725 35	S01725 40
27	166.8	165.20	85.8	S01727 25	S01727 30	S01727 35	S01727 40
29	178.5	177.24	91.8	S01729 25	S01729 30	S01729 35	S01729 40

machined idler wheels

802 / 804 / 805 SERIES



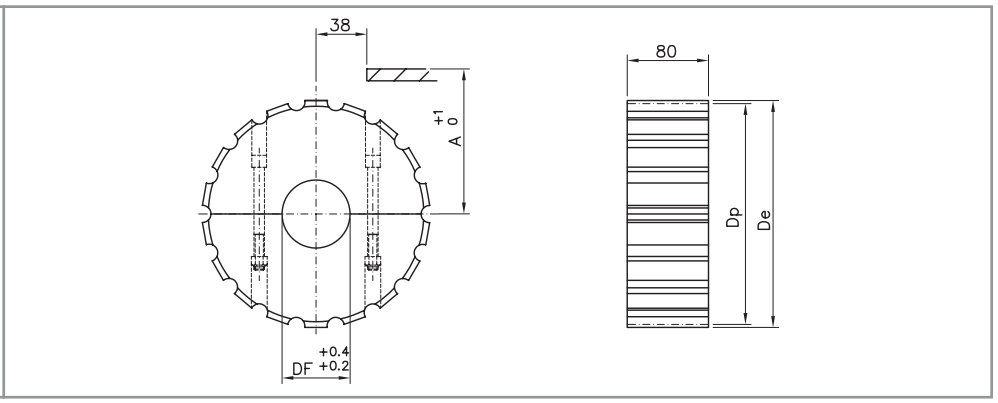

Split idler wheels
material: polyamide - screws in stainless steel

DIMENSIONS				PRODUCT CODE			
Z	De	Dp	A	DF 25	DF 30	DF 35	DF 40
19	117.0	117.34	61.9	R11719 25	R11719 30	R11719 35	R11719 40
21	129.0	129.26	67.8	R11721 25	R11721 30	R11721 35	R11721 40
23	142.0	141.21	73.8	R11723 25	R11723 30	R11723 35	R11723 40
25	154.0	153.21	79.8	R11725 25	R11725 30	R11725 35	R11725 40
27	166.8	165.20	85.8	R11727 25	R11727 30	R11727 35	R11727 40
29	178.5	177.24	91.8	R11729 25	R11729 30	R11729 35	R11729 40



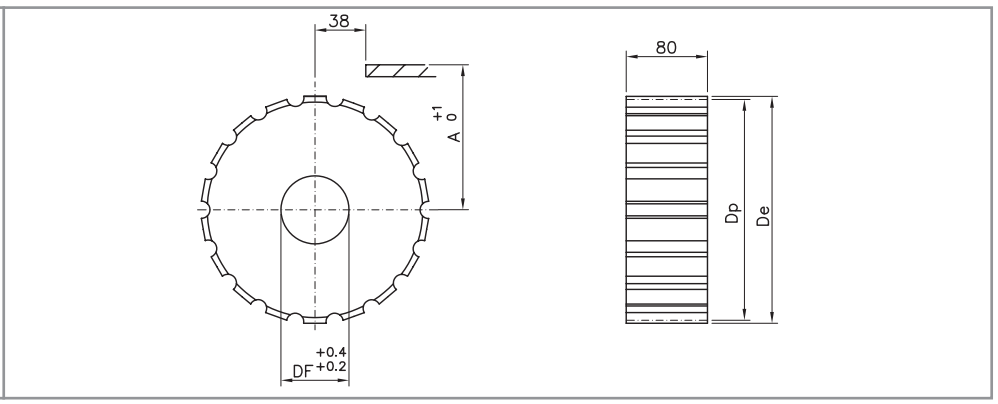

Standard idler wheels
material: polyamide

DIMENSIONS				PRODUCT CODE			
Z	De	Dp	A	DF 25	DF 30	DF 35	DF 40
19	117.0	117.34	61.9	R01719 25	R01719 30	R01719 35	R01719 40
21	129.0	129.26	67.8	R01721 25	R01721 30	R01721 35	R01721 40
23	142.0	141.21	73.8	R01723 25	R01723 30	R01723 35	R01723 40
25	154.0	153.21	79.8	R01725 25	R01725 30	R01725 35	R01725 40
27	166.8	165.20	85.8	R01727 25	R01727 30	R01727 35	R01727 40
29	178.5	177.24	91.8	R01729 25	R01729 30	R01729 35	R01729 40

machined idler wheels

802 / 805 SERIES



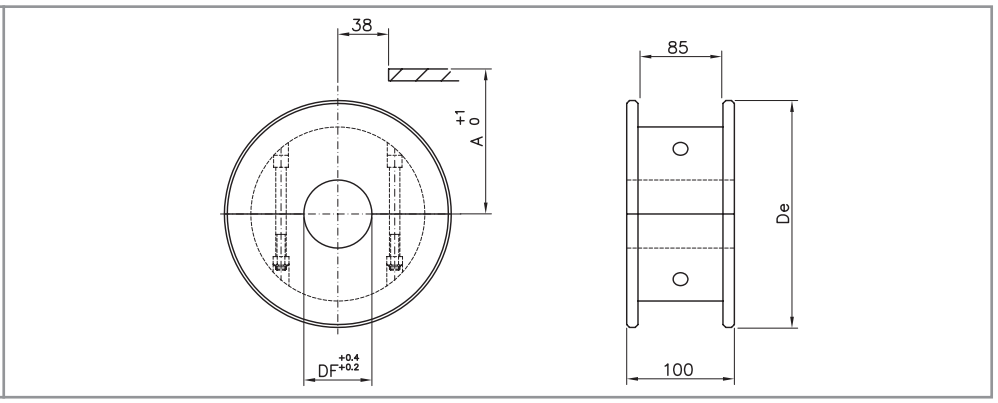

Split idler wheels
material: polyamide - screws in stainless steel

DIMENSIONS			PRODUCT CODE				
Z eq.	De	A	DF 20	DF 25	DF 30	DF 35	DF 40
19	117.0	62.6	P11219 20	P11219 25	P11219 30	P11219 35	P11219 40
21	129.8	68.6	P11221 20	P11221 25	P11221 30	P11221 35	P11221 40
23	142.2	74.6	P11223 20	P11223 25	P11223 30	P11223 35	P11223 40
25	154.7	80.5	P11225 20	P11225 25	P11225 30	P11225 35	P11225 40
27	167.2	88.5	P11227 20	P11227 25	P11227 30	P11227 35	P11227 40
29	179.3	92.8	P11229 20	P11229 25	P11229 30	P11229 35	P11229 40



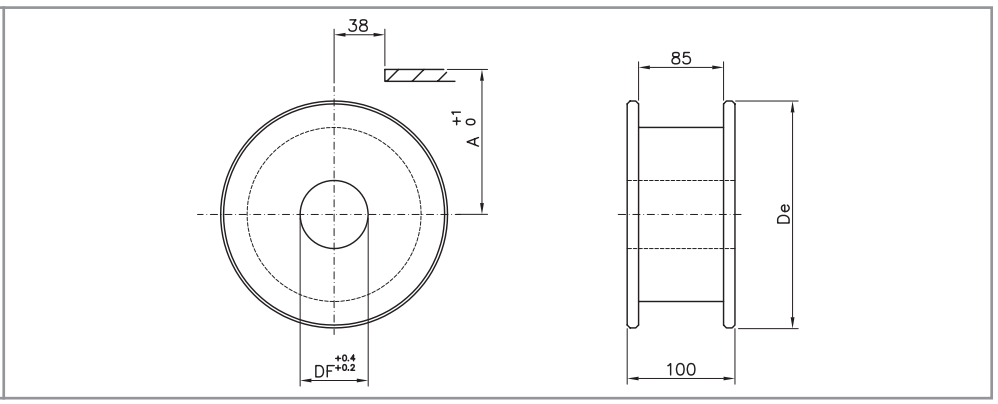

Standard idler wheels
material: polyamide

DIMENSIONS			PRODUCT CODE				
Z eq.	De	A	DF 20	DF 25	DF 30	DF 35	DF 40
19	117.0	62.6	P01219 20	P01219 25	P01219 30	P01219 35	P01219 40
21	129.8	68.6	P01221 20	P01221 25	P01221 30	P01221 35	P01221 40
23	142.2	74.6	P01223 20	P01223 25	P01223 30	P01223 35	P01223 40
25	154.7	80.5	P01225 20	P01225 25	P01225 30	P01225 35	P01225 40
27	167.2	88.5	P01227 20	P01227 25	P01227 30	P01227 35	P01227 40
29	179.3	92.8	P01229 20	P01229 25	P01229 30	P01229 35	P01229 40

injected sprockets and idler wheels

802 / 805 SERIES



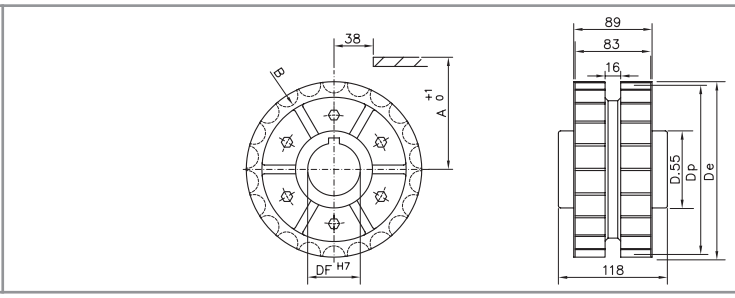

Drive sprockets

material: reinforced polyamide - screws in stainless steel - UNI 6604-69 key seat

DIMENSIONS					PRODUCT CODE			
Z	De	Dp	A	B	DF 25	DF 30	DF 35	DF 40
25	154.0	153.2	79.8	140.1	S00225 25	S00225 30	S00225 35	S00225 40



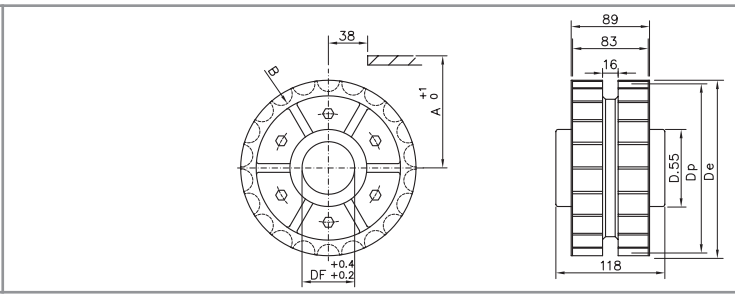

Standard idler wheels

material: polyamide - screws in stainless steel

DIMENSIONS					PRODUCT CODE			
Z	De	Dp	A	B	DF 25	DF 30	DF 35	DF 40
25	154.0	153.2	79.8	140.1	R00225 25	R00225 30	R00225 35	R00225 40



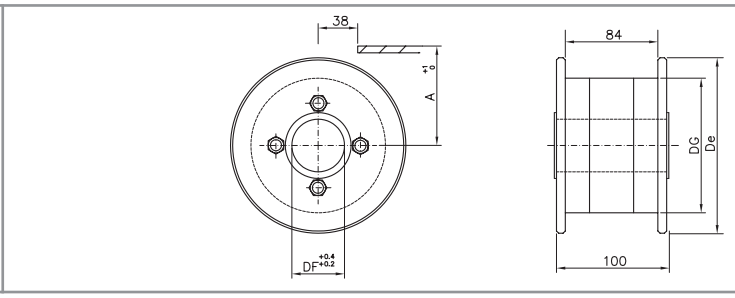

Self-lubricating standard idler wheels

material: self-lubrificating polyamide - screws in zinc plated steel / colour: black

DIMENSIONS				PRODUCT CODE			
Z eq.	De	DG	A	DF 25	DF 30	DF 35	DF 40
19	118.0	80.0	62.6	K00219 25	K00219 30	K00219 35	K00219 40
21	129.8	80.0	68.6	K00221 25	K00221 30	K00221 35	K00221 40
23	142.5	108.0	74.6	K00223 25	K00223 30	K00223 35	K00223 40
25	155.0	108.0	80.5	K00225 25	K00225 30	K00225 35	K00225 40

machined sprockets

8127 / 8817 M SERIES

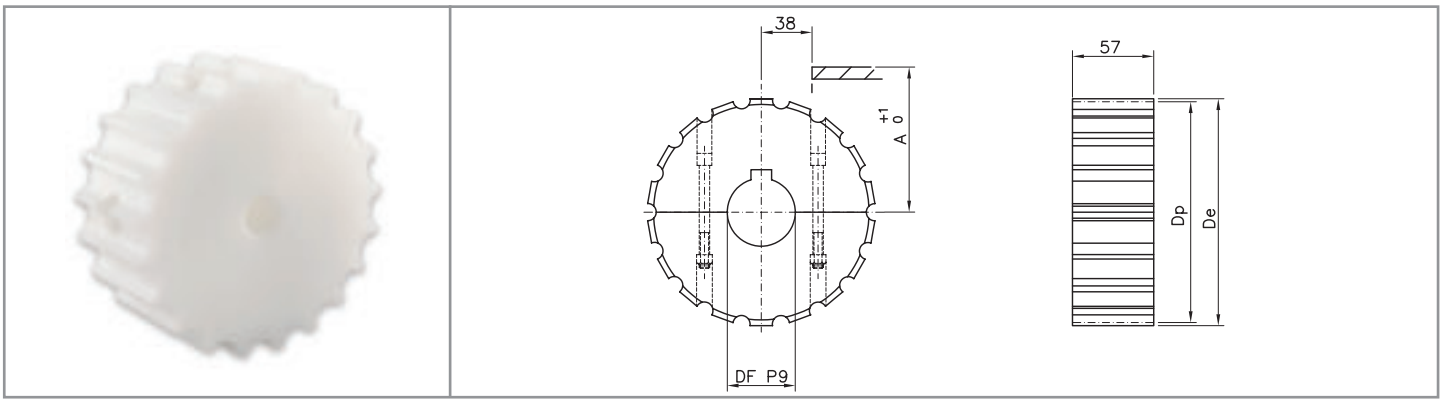

Split sprockets

material: polyamide - screws in stainless steel - UNI 6604 - 69 key seat

DIMENSIONS				PRODUCT CODE				
Z	De	Dp	A	DF 18*	DF 25	DF 30	DF 35	DF 40
17	103.9	105.47	55.9	S11317 18	S11317 25	S11317 30	S11317 35	S11317 40
19	117.0	117.34	61.9	S11319 18	S11319 25	S11319 30	S11319 35	S11319 40
21	129.0	129.26	67.8	S11321 18	S11321 25	S11321 30	S11321 35	S11321 40
23	142.0	141.21	73.8	S11323 18	S11323 25	S11323 30	S11323 35	S11323 40
25	154.0	153.21	79.8	S11325 18	S11325 25	S11325 30	S11325 35	S11325 40
27	166.8	165.20	85.8	S11327 18	S11327 25	S11327 30	S11327 35	S11327 40
29	178.5	177.24	91.8	S11329 18	S11329 25	S11329 30	S11329 35	S11329 40

* plain bore

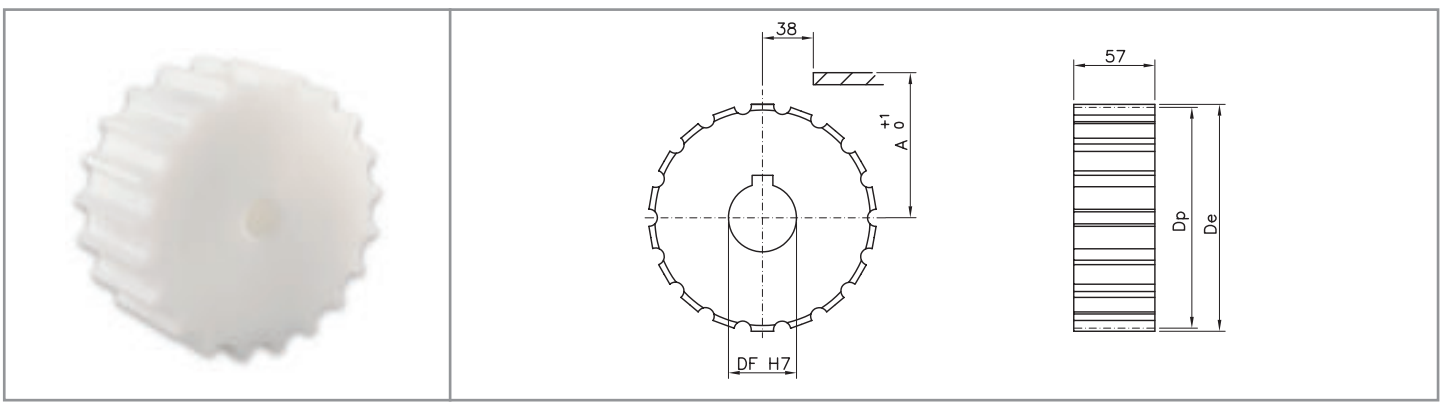

Standard sprockets

material: polyamide - UNI 6604-69 key seat

DIMENSIONS				PRODUCT CODE			
Z	De	Dp	A	DF 25	DF 30	DF 35	DF 40
17	103.9	105.47	55.9	S01317 25	S01317 30	S01317 35	S01317 40
19	117.0	117.34	61.9	S01319 25	S01319 30	S01319 35	S01319 40
21	129.0	129.26	67.8	S01321 25	S01321 30	S01321 35	S01321 40
23	142.0	141.21	73.8	S01323 25	S01323 30	S01323 35	S01323 40
25	154.0	153.21	79.8	S01325 25	S01325 30	S01325 35	S01325 40
27	166.8	165.20	85.8	S01327 25	S01327 30	S01327 35	S01327 40
29	178.5	177.24	91.8	S01329 25	S01329 30	S01329 35	S01329 40

machined idler wheels

8127 / 8817 M SERIES

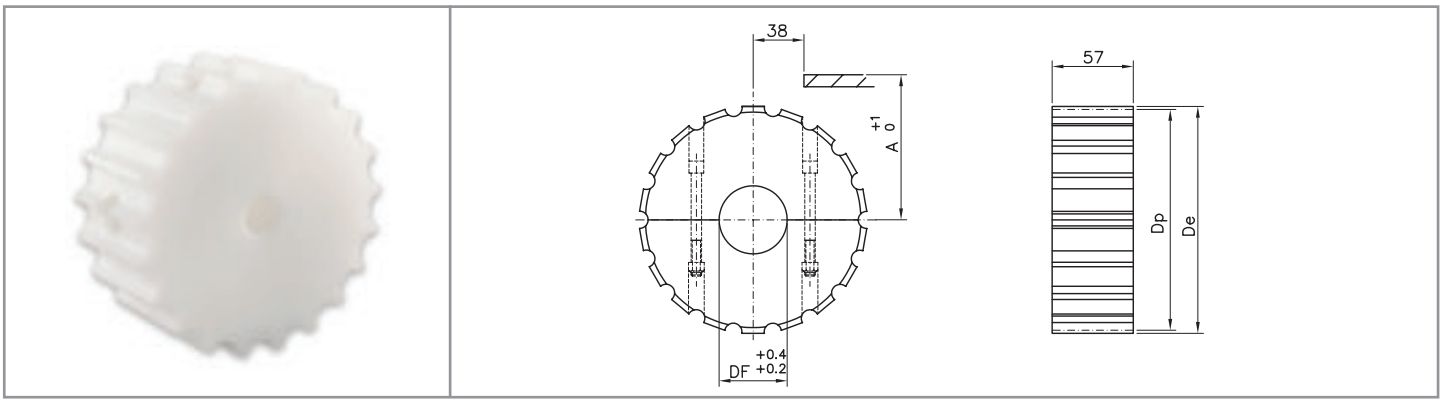

Split idler wheels

material: polyamide - screws in stainless steel

DIMENSIONS				PRODUCT CODE			
Z	De	Dp	A	DF 25	DF 30	DF 35	DF 40
17	103.9	105.47	55.9	R11317 25	R11317 30	R11317 35	R11317 40
19	117.0	117.34	61.9	R11319 25	R11319 30	R11319 35	R11319 40
21	129.0	129.26	67.8	R11321 25	R11321 30	R11321 35	R11321 40
23	142.0	141.21	73.8	R11323 25	R11323 30	R11323 35	R11323 40
25	154.0	153.21	79.8	R11325 25	R11325 30	R11325 35	R11325 40
27	166.8	165.20	85.8	R11327 25	R11327 30	R11327 35	R11327 40
29	178.5	177.24	91.8	R11329 25	R11329 30	R11329 35	R11329 40

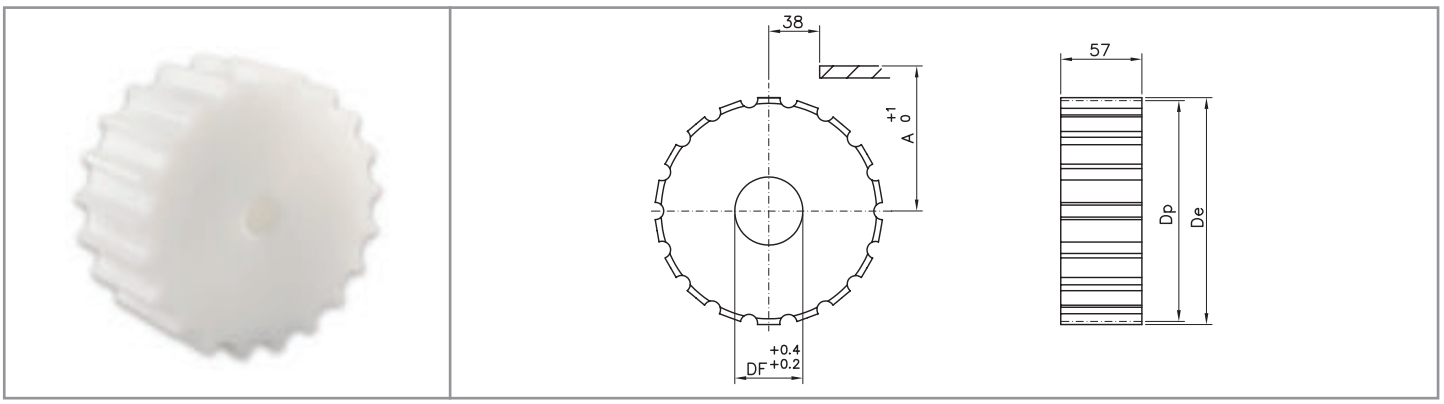

Standard idler wheels

material: polyamide

DIMENSIONS				PRODUCT CODE			
Z	De	Dp	A	DF 25	DF 30	DF 35	DF 40
17	103.9	105.47	55.9	R01317 25	R01317 30	R01317 35	R01317 40
19	117.0	117.34	61.9	R01319 25	R01319 30	R01319 35	R01319 40
21	129.0	129.26	67.8	R01321 25	R01321 30	R01321 35	R01321 40
23	142.0	141.21	73.8	R01323 25	R01323 30	R01323 35	R01323 40
25	154.0	153.21	79.8	R01325 25	R01325 30	R01325 35	R01325 40
27	166.8	165.20	85.8	R01327 25	R01327 30	R01327 35	R01327 40
29	178.5	177.24	91.8	R01329 25	R01329 30	R01329 35	R01329 40

machined idler wheels

8127 / 8817 M SERIES



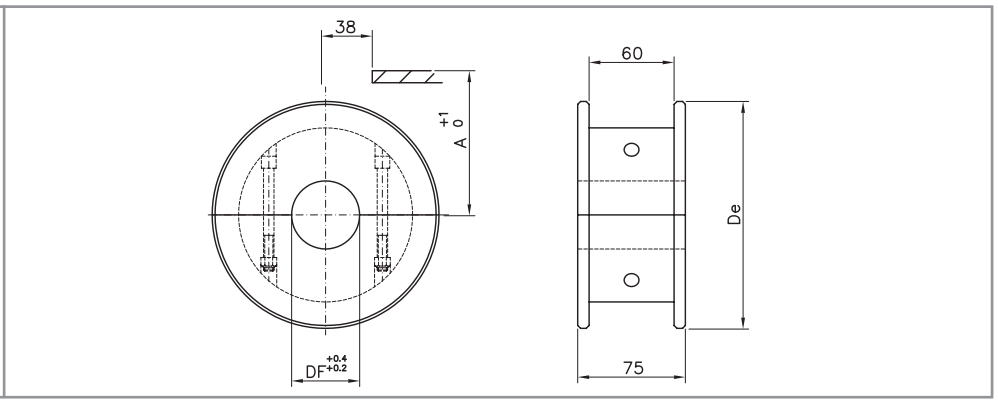

Split idler wheels
material: polyamide - screws in stainless steel

DIMENSIONS			PRODUCT CODE				
Z eq.	De	A	DF 20	DF 25	DF 30	DF 35	DF 40
17	104.0	56.2	P11417 20	P11417 25	P11417 30	P11417 35	P11417 40
19	117.0	62.6	P11419 20	P11419 25	P11419 30	P11419 35	P11419 40
21	129.8	68.6	P11421 20	P11421 25	P11421 30	P11421 35	P11421 40
23	142.2	74.6	P11423 20	P11423 25	P11423 30	P11423 35	P11423 40
25	154.7	80.5	P11425 20	P11425 25	P11425 30	P11425 35	P11425 40
27	167.2	88.5	P11427 20	P11427 25	P11427 30	P11427 35	P11427 40
29	179.3	92.8	P11429 20	P11429 25	P11429 30	P11429 35	P11429 40



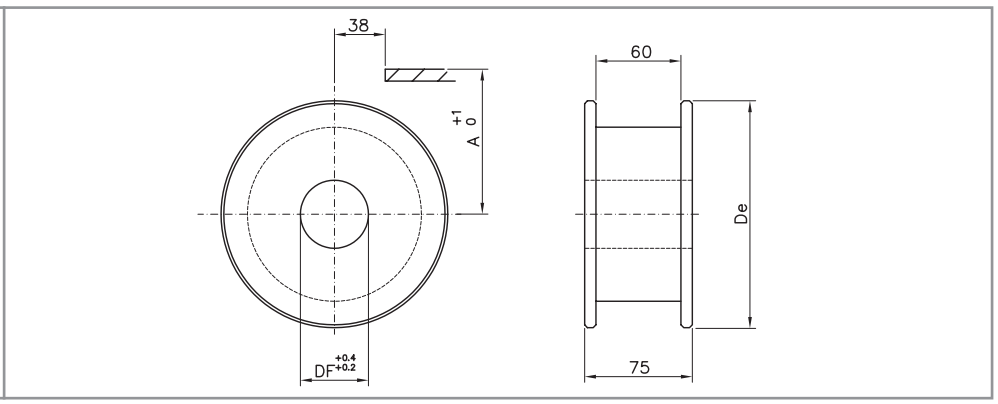

Standard idler wheels
material: polyamide

DIMENSIONS			PRODUCT CODE				
Z eq.	De	A	DF 20	DF 25	DF 30	DF 35	DF 40
17	104.0	56.2	P01417 20	P01417 25	P01417 30	P01417 35	P01417 40
19	117.0	62.6	P01419 20	P01419 25	P01419 30	P01419 35	P01419 40
21	129.8	68.6	P01421 20	P01421 25	P01421 30	P01421 35	P01421 40
23	142.2	74.6	P01423 20	P01423 25	P01423 30	P01423 35	P01423 40
25	154.7	80.5	P01425 20	P01425 25	P01425 30	P01425 35	P01425 40
27	167.2	88.5	P01427 20	P01427 25	P01427 30	P01427 35	P01427 40
29	179.3	92.8	P01429 20	P01429 25	P01429 30	P01429 35	P01429 40

injected sprockets and idler wheels

8127 / 8817 M SERIES



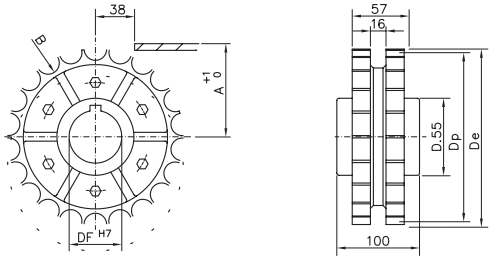

Drive sprockets

material: reinforced polyamide - screws in stainless steel

DIMENSIONS					PRODUCT CODE			
Z	De	Dp	A	B	DF 25	DF 30	DF 35	DF 40
25	154.0	153.2	79.8	140.1	S00325 25	S00325 30	S00325 35	S00325 40



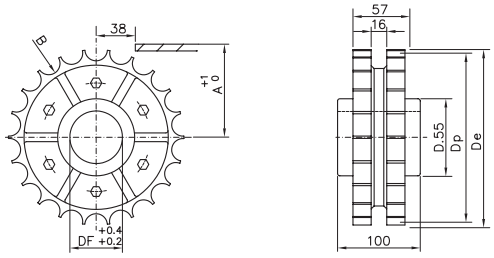

Standard idler wheels

material: polyamide - screws in stainless steel

DIMENSIONS					PRODUCT CODE			
Z	De	Dp	A	B	DF 25	DF 30	DF 35	DF 40
25	154.0	153.2	79.8	140.1	R00325 25	R00325 30	R00325 35	R00325 40



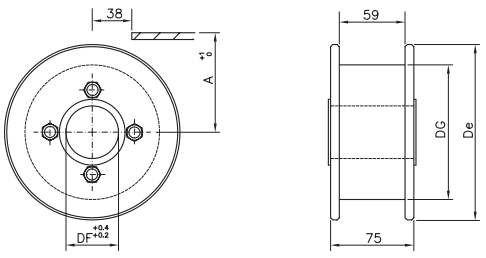

Self-lubricating idler wheels

material: self-lubrificating polyamide - screws in zinc plated steel / colour: black

DIMENSIONS				PRODUCT CODE			
Z eq.	De	DG	A	DF 25	DF 30	DF 35	DF 40
19	118.0	80.0	62.6	K00419 25	K00419 30	K00419 35	K00419 40
21	129.8	80.0	68.6	K00421 25	K00421 30	K00421 35	K00421 40
23	142.5	108.0	74.6	K00423 25	K00423 30	K00423 35	K00423 40
25	155.0	108.0	80.5	K00425 25	K00425 30	K00425 35	K00425 40

machined sprockets

881 / 8811 / 881TAB / 8811TAB / 8811R-TAB / 815TAB SERIES



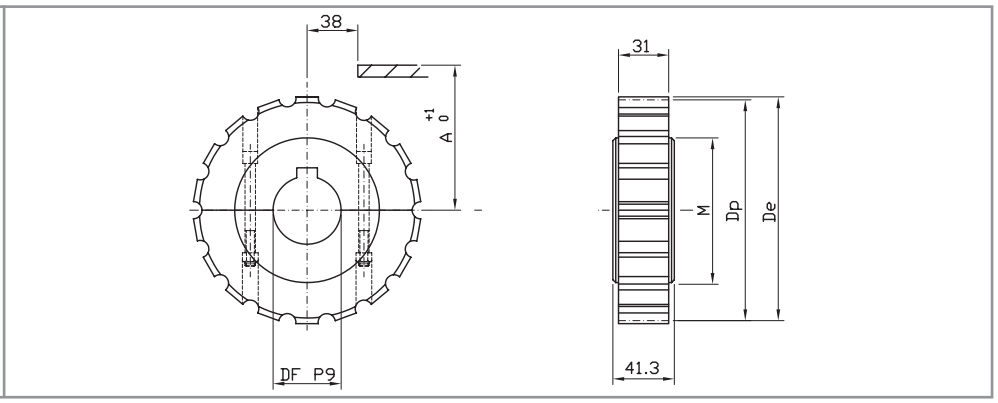

Self-lubricating idler wheels
material: polyamide - screws in stainless steel - UNI 6604-69 key seat

DIMENSIONS					PRODUCT CODE				
Z	De	Dp	A	M	DF 18*	DF 25	DF 30	DF 35	DF 40
17	103.9	105.47	55.9	60.0	S11417 18	S11417 25	S11417 30	S11417 35	S11417 40
19	117.0	117.34	61.9	70.0	S11419 18	S11419 25	S11419 30	S11419 35	S11419 40
21	129.0	129.26	67.8	75.0	S11421 18	S11421 25	S11421 30	S11421 35	S11421 40
23	142.0	141.21	73.8	80.0	S11423 18	S11423 25	S11423 30	S11423 35	S11423 40
25	154.0	153.21	79.8	90.0	S11425 18	S11425 25	S11425 30	S11425 35	S11425 40
27	166.8	165.20	85.8	100.0	S11427 18	S11427 25	S11427 30	S11427 35	S11427 40
29	178.5	177.24	91.8	110.0	S11429 18	S11429 25	S11429 30	S11429 35	S11429 40

* plain bore



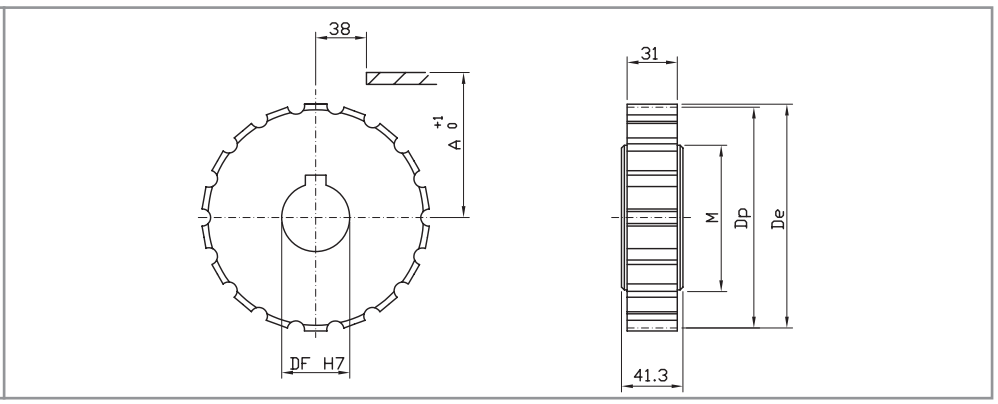

Standard sprockets
material: polyamide - screws in stainless steel - UNI 6604-69 key seat

DIMENSIONS					PRODUCT CODE			
Z	De	Dp	A	M	DF 25	DF 30	DF 35	DF 40
17	103.9	105.47	55.9	60.0	S01417 25	S01417 30	S01417 35	S01417 40
19	117.0	117.34	61.9	70.0	S01419 25	S01419 30	S01419 35	S01419 40
21	129.0	129.26	67.8	75.0	S01421 25	S01421 30	S01421 35	S01421 40
23	142.0	141.21	73.8	80.0	S01423 25	S01423 30	S01423 35	S01423 40
25	154.0	153.21	79.8	90.0	S01425 25	S01425 30	S01425 35	S01425 40
27	166.8	165.20	85.8	100.0	S01427 25	S01427 30	S01427 35	S01427 40
29	178.5	177.24	91.8	110.0	S01429 25	S01429 30	S01429 35	S01429 40

machined idler wheels

881 / 8811 / 881TAB / 8811TAB / 8811R-TAB / 815TAB SERIES



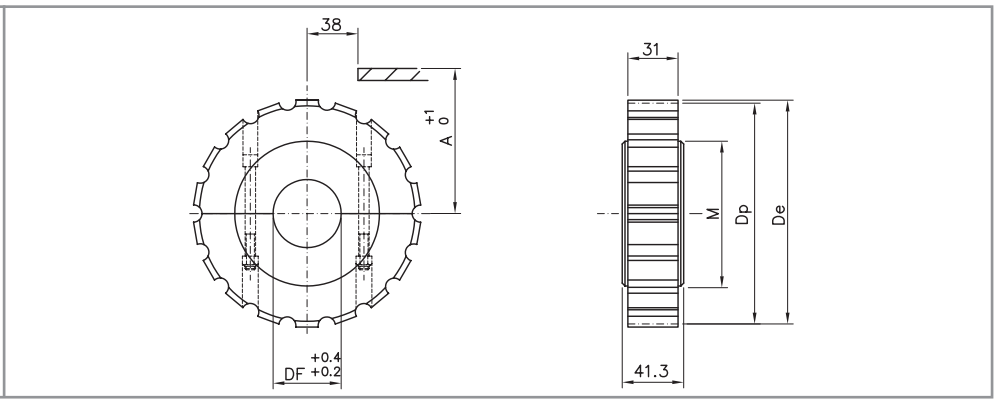

Split idler wheels

material: polyamide - screws in stainless steel

DIMENSIONS					PRODUCT CODE			
Z	De	Dp	A	M	DF 25	DF 30	DF 35	DF 40
17	103.9	105.47	55.9	60.0	R11417 25	R11417 30	R11417 35	R11417 40
19	117.0	117.34	61.9	70.0	R11419 25	R11419 30	R11419 35	R11419 40
21	129.0	129.26	67.8	75.0	R11421 25	R11421 30	R11421 35	R11421 40
23	142.0	141.21	73.8	80.0	R11423 25	R11423 30	R11423 35	R11423 40
25	154.0	153.21	79.8	90.0	R11425 25	R11425 30	R11425 35	R11425 40
27	166.8	165.20	85.8	100.0	R11427 25	R11427 30	R11427 35	R11427 40
29	178.5	177.24	91.8	110.0	R11429 25	R11429 30	R11429 35	R11429 40



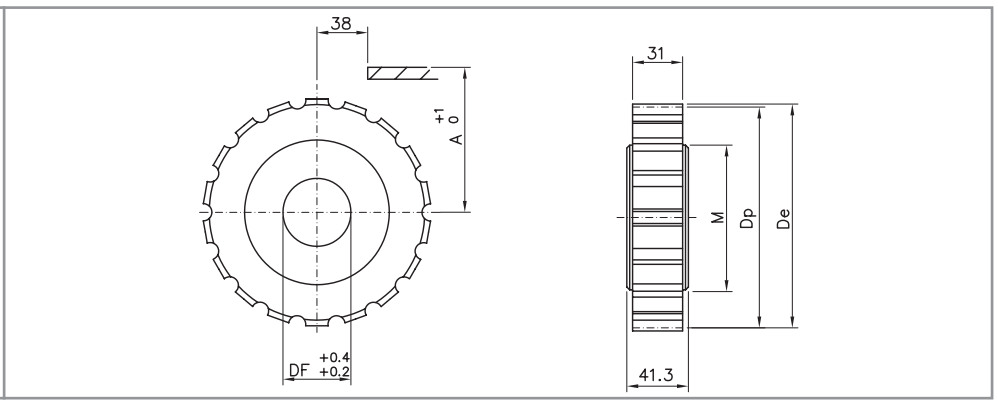

Standard idler wheels

material: polyamide

DIMENSIONS					PRODUCT CODE			
Z	De	Dp	A	M	DF 25	DF 30	DF 35	DF 40
17	104.7	105.48	55.9	60.0	R01417 25	R01417 30	R01417 35	R01417 40
19	117.0	117.34	61.9	70.0	R01419 25	R01419 30	R01419 35	R01419 40
21	129.0	129.26	67.8	75.0	R01421 25	R01421 30	R01421 35	R01421 40
23	142.0	141.21	73.8	80.0	R01423 25	R01423 30	R01423 35	R01423 40
25	154.0	153.21	79.8	90.0	R01425 25	R01425 30	R01425 35	R01425 40
27	166.8	165.20	85.8	100.0	R01427 25	R01427 30	R01427 35	R01427 40
29	178.5	177.24	91.8	110.0	R01429 25	R01429 30	R01429 35	R01429 40

machined idler wheels

881TAB / 8811TAB / 8811R-TAB / 815TAB SERIES



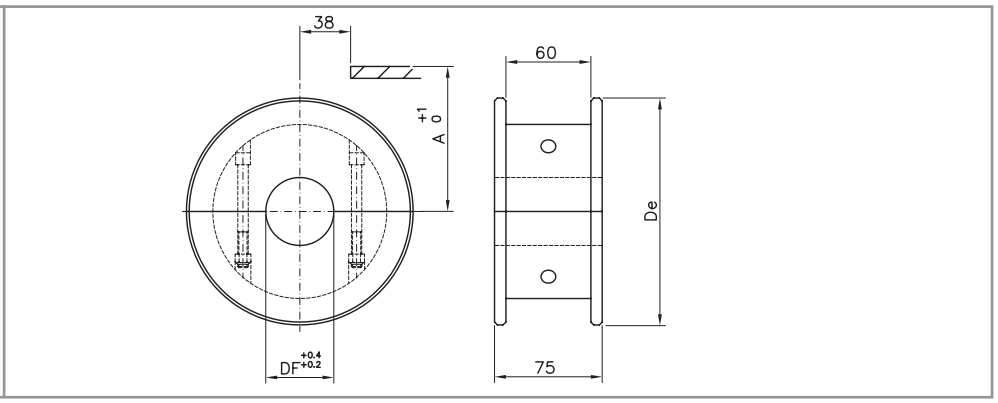

Split idler wheels
material: polyamide - screws in stainless steel

DIMENSIONS			PRODUCT CODE				
Z eq.	De	A	DF 20	DF 25	DF 30	DF 35	DF 40
17	104.0	56.2	P11417 20	P11417 25	P11417 30	P11417 35	P11417 40
19	117.0	62.6	P11419 20	P11419 25	P11419 30	P11419 35	P11419 40
21	129.8	68.6	P11421 20	P11421 25	P11421 30	P11421 35	P11421 40
23	142.2	74.6	P11423 20	P11423 25	P11423 30	P11423 35	P11423 40
25	154.7	80.5	P11425 20	P11425 25	P11425 30	P11425 35	P11425 40
27	167.2	88.5	P11427 20	P11427 25	P11427 30	P11427 35	P11427 40
29	179.3	92.8	P11429 20	P11429 25	P11429 30	P11429 35	P11429 40



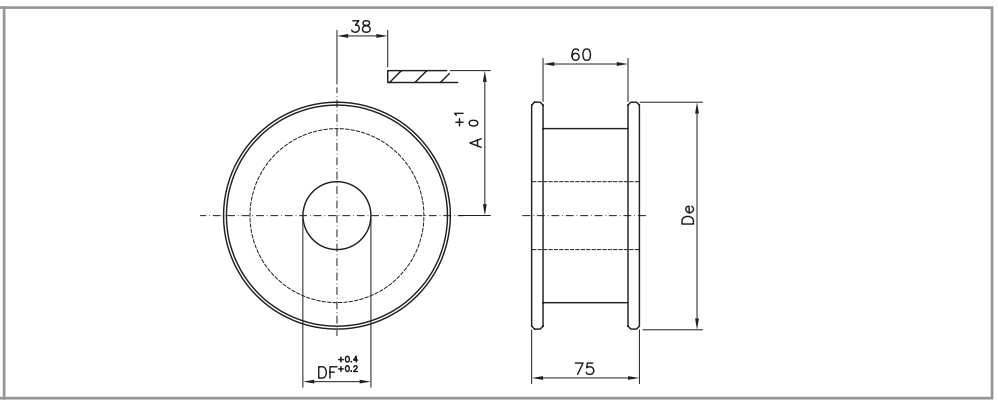

Standard idler wheels
material: polyamide

DIMENSIONS			PRODUCT CODE				
Z eq.	De	A	DF 20	DF 25	DF 30	DF 35	DF 40
17	104.0	56.2	P01417 20	P01417 25	P01417 30	P01417 35	P01417 40
19	117.0	62.6	P01419 20	P01419 25	P01419 30	P01419 35	P01419 40
21	129.8	68.6	P01421 20	P01421 25	P01421 30	P01421 35	P01421 40
23	142.2	74.6	P01423 20	P01423 25	P01423 30	P01423 35	P01423 40
25	154.7	80.5	P01425 20	P01425 25	P01425 30	P01425 35	P01425 40
27	167.2	88.5	P01427 20	P01427 25	P01427 30	P01427 35	P01427 40
29	179.3	92.8	P01429 20	P01429 25	P01429 30	P01429 35	P01429 40

machined idler wheels

881 / 8811 BEVEL SERIES



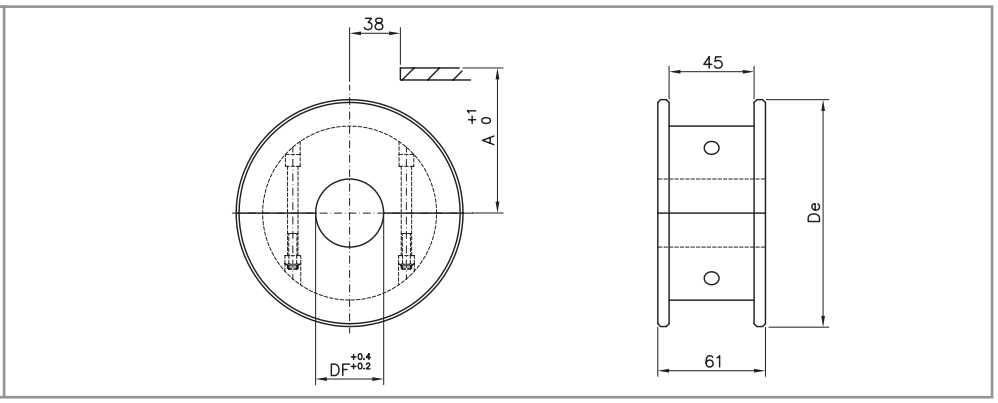

Split idler wheels
material: polyamide - screws in stainless steel

DIMENSIONS			PRODUCT CODE				
Z eq.	De	A	DF 20	DF 25	DF 30	DF 35	DF 40
17	104.0	56.2	P11617 20	P11617 25	P11617 30	P11617 35	P11617 40
19	117.0	62.6	P11619 20	P11619 25	P11619 30	P11619 35	P11619 40
21	129.8	68.6	P11621 20	P11621 25	P11621 30	P11621 35	P11621 40
23	142.2	74.6	P11623 20	P11623 25	P11623 30	P11623 35	P11623 40
25	154.7	80.5	P11625 20	P11625 25	P11625 30	P11625 35	P11625 40
27	167.2	88.5	P11627 20	P11627 25	P11627 30	P11627 35	P11627 40
29	179.3	92.8	P11629 20	P11629 25	P11629 30	P11629 35	P11629 40



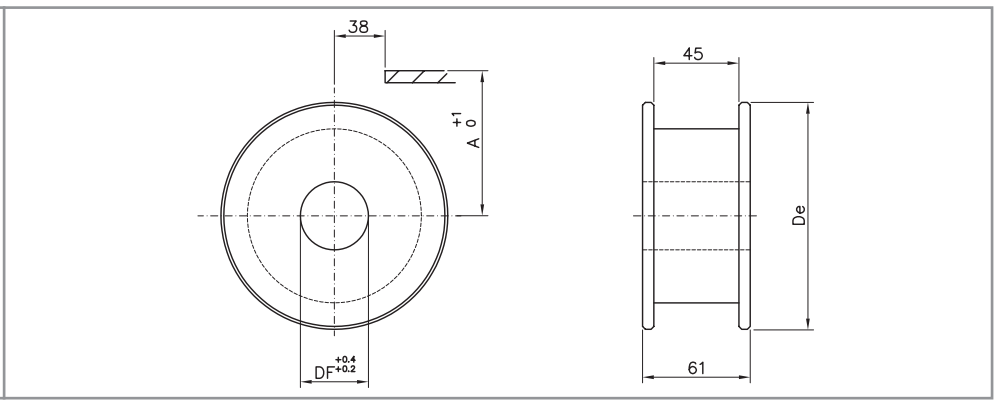

Standard idler wheels
material: polyamide

DIMENSIONS			PRODUCT CODE				
Z eq.	De	A	DF 20	DF 25	DF 30	DF 35	DF 40
17	104.0	56.2	P01617 20	P01617 25	P01617 30	P01617 35	P01617 40
19	117.0	62.6	P01619 20	P01619 25	P01619 30	P01619 35	P01619 40
21	129.8	68.6	P01621 20	P01621 25	P01621 30	P01621 35	P01621 40
23	142.2	74.6	P01623 20	P01623 25	P01623 30	P01623 35	P01623 40
25	154.7	80.5	P01625 20	P01625 25	P01625 30	P01625 35	P01625 40
27	167.2	88.5	P01627 20	P01627 25	P01627 30	P01627 35	P01627 40
29	179.3	92.8	P01629 20	P01629 25	P01629 30	P01629 35	P01629 40

injected sprockets

881 / 8811 / 881TAB / 8811TAB SERIES



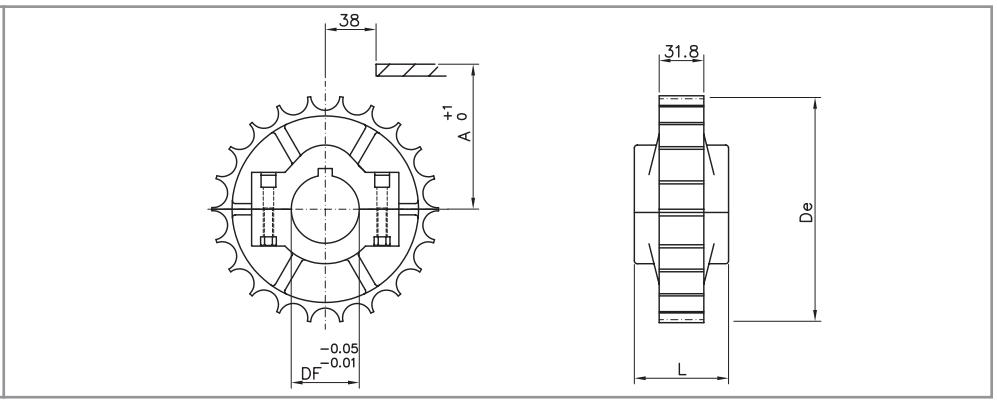

Split sprockets

material: reinforced polyamide - screws in stainless steel, nuts in nickel plated brass - UNI 6604-69 key seat

DIMENSIONS					PRODUCT CODE				
Z	De	A	B	L	DF 25	DF 30	DF 35	DF 40	DF 45
21	129.0	67.8	116.1	51.0	S10421 25	S10421 30	S10421 35	S10421 40	S10421 45
23	142.0	73.8	128.1	51.0	S10423 25	S10423 30	S10423 35	S10423 40	S10423 45
25	154.0	79.8	140.1	58.5	S10425 25	S10425 30	S10425 35	S10425 40	S10425 45



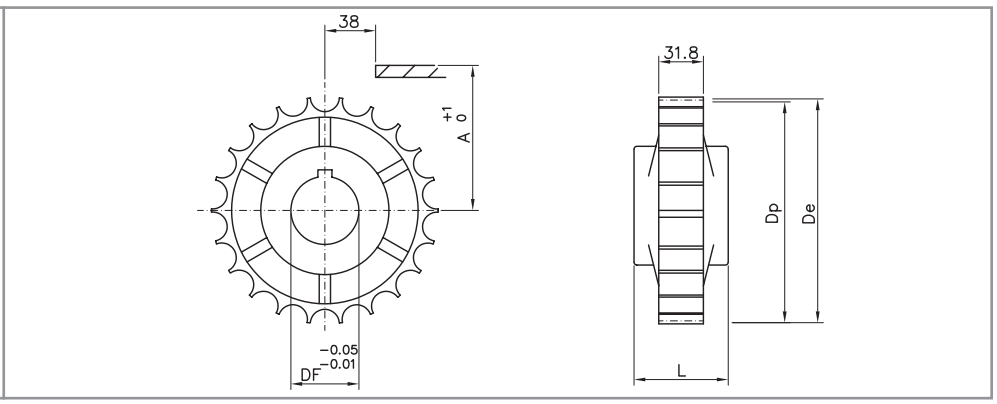

Standard sprockets

material: polyamide - UNI 6604 - 69 key seat

DIMENSIONS					PRODUCT CODE			
Z	De	Dp	A	L	DF 25	DF 30	DF 35	DF 40
21	129.0	129.26	67.8	51.0	S00421 25	S00421 30	S00421 35	S00421 40
25	154.0	153.20	79.8	58.5	S00425 25	S00425 30	S00425 35	S00425 40

injected idler wheels

881 / 8811 / 881TAB / 8811TAB / 8811R-TAB / 815 TAB SERIES



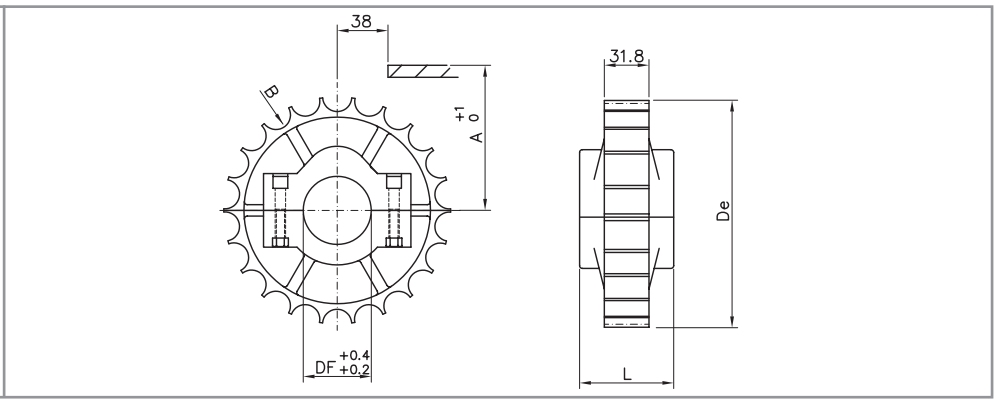

Split idler wheels
material: polyamide - screws in stainless steel - nuts in nickel plated brass / colour: black

DIMENSIONS					PRODUCT CODE				
Z	De	A	B	L	DF 25	DF 30	DF 35	DF 40	DF 45
21	129.0	67.8	116.1	51.0	R10421 25	R10421 30	R10421 35	R10421 40	R10421 45
23	142.0	73.8	128.1	51.0	R10423 25	R10423 30	R10423 35	R10423 40	R10423 45
25	154.0	79.8	140.1	58.5	R10425 25	R10425 30	R10425 35	R10425 40	R10425 45



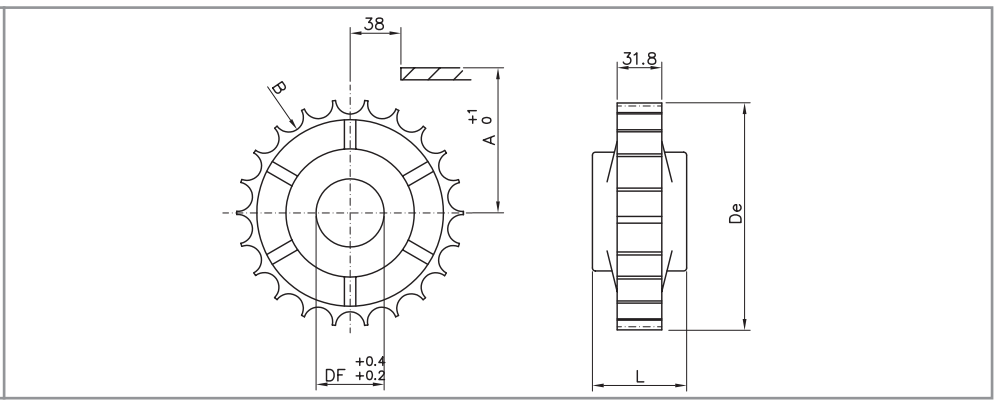

Standard idler wheels
material: polyamide / colour: black

DIMENSIONS					PRODUCT CODE			
Z	De	Dp	A	L	DF 25	DF 30	DF 35	DF 40
21	129.0	129.26	67.8	51.0	R00421 25	R00421 30	R00421 35	R00421 40
25	154.0	153.20	79.8	58.5	R00425 25	R00425 30	R00425 35	R00425 40

injected idler wheels

881TAB / 8811TAB / 8811R-TAB / 815 TAB SERIES

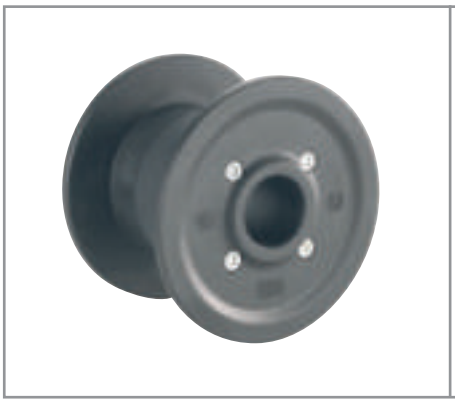

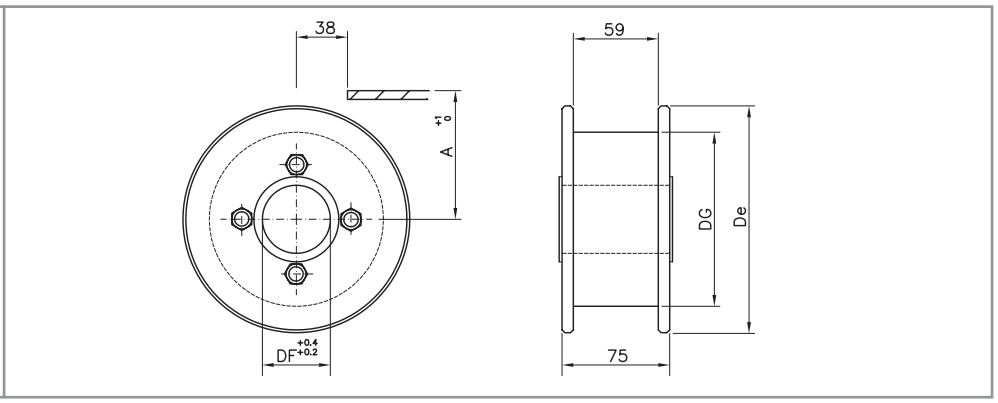

Self-lubricating idler wheels
material: self-lubricating polyamide - screws in zinc plated steel / colour: black

DIMENSIONS				PRODUCT CODE			
Z eq.	De	DG	A	DF 25	DF 30	DF 35	DF 40
19	118.0	80.0	62.6	K00419 25	K00419 30	K00419 35	K00419 40
21	129.8	80.0	68.6	K00421 25	K00421 30	K00421 35	K00421 40
23	142.5	108.0	74.6	K00423 25	K00423 30	K00423 35	K00423 40
25	155.0	108.0	80.5	K00425 25	K00425 30	K00425 35	K00425 40

881 / 8811 / 8811M SERIES

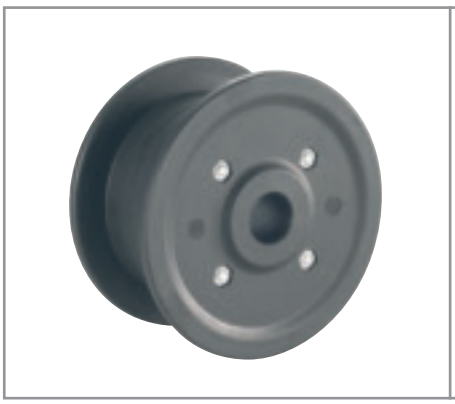

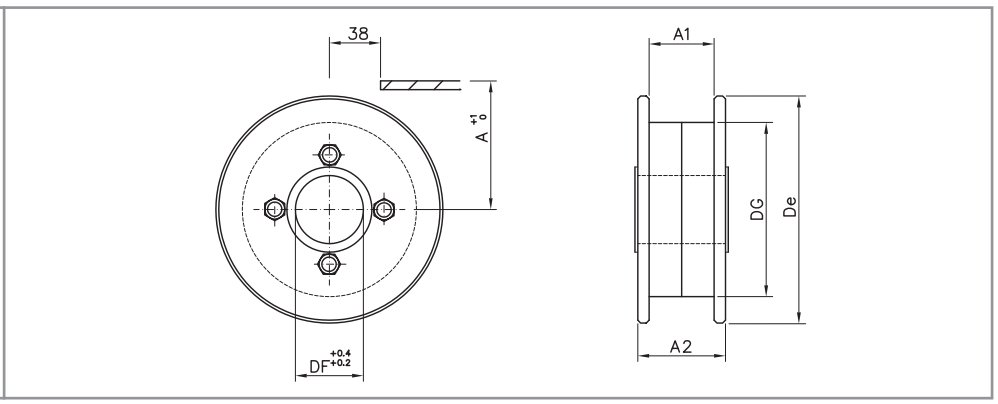

Self-lubricating idler wheels
material: self-lubricating polyamide - screws in zinc plated steel / colour: black

DIMENSIONS						PRODUCT CODE				
Z eq.	De	DG	A	A1	A2	DF 25	DF 30	DF 35	DF 40	DF 45
15	90.0	58.0	48.2	48.0	83.0	K00615 25	K00615 30	K00615 35	K00615 40	K00615 45
17	106.0	71.0	56.2	44.0	52.0	K00617 25	K00617 30	/	/	/
19	118.0	80.0	62.6	44.0	60.0	K00619 25	K00619 30	K00619 35	K00619 40	/
21	129.8	80.0	68.6	44.0	60.0	K00621 25	K00621 30	K00621 35	K00621 40	/
23	142.5	108.0	74.6	44.0	60.0	K00623 25	K00623 30	K00623 35	K00623 40	/
25	155.0	108.0	80.5	44.0	60.0	K00625 25	K00625 30	K00625 35	K00625 40	/

injected idler wheels

881 / 8811 / 8811M SERIES



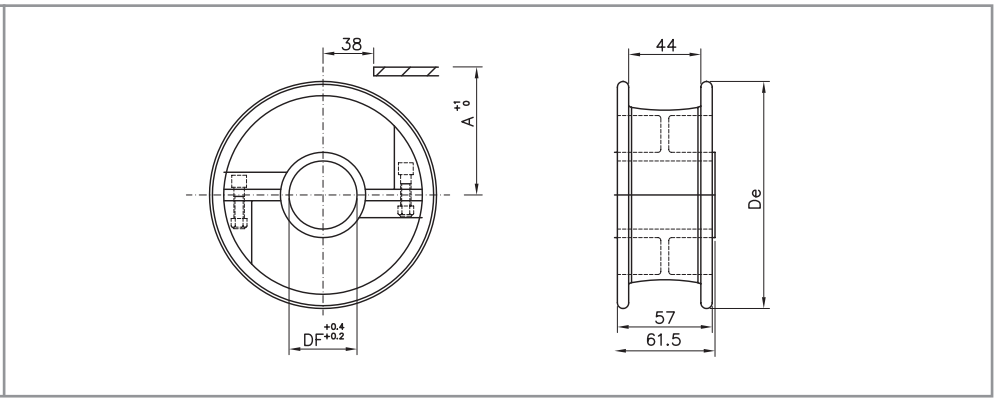

Split idler wheels

material: self-lubricating polyamide / colour: black

DIMENSIONS			PRODUCT CODE			
Z eq.	De	A	DF 25	DF 30	DF 35	DF 40
21	129.8	48.2	P10621 25	P10621 30	P10621 35	P10621 40
23	142.5	74.6	P10623 25	P10623 30	P10623 35	P10623 40
25	154.5	80.5	P10625 25	P10625 30	P10625 35	P10625 40



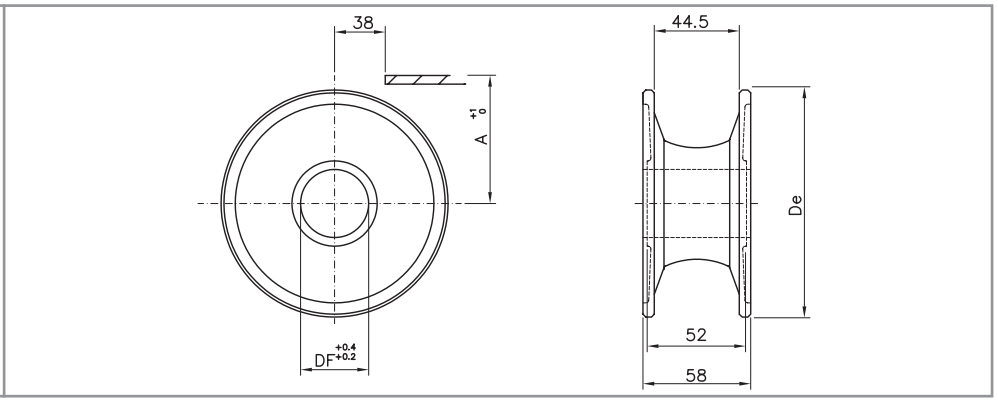

Standard idler wheels

material: self-lubricating polyamide / colour: black

DIMENSIONS			PRODUCT CODE				
Z eq.	De	A	DF 20	DF 25	DF 30	DF 35	DF 40
15	95.5	92.0	/	P00615 25	P00615 30	/	/
17	106.5	57.0	/	P00617 25	P00617 30	/	/
18	113.0	92.0	/	P00618 25	P00618 30	/	/
19	117.0	62.6	P00619 20	P00619 25	P00619 30	P00619 35	P00619 40
21	129.8	68.6	P00621 20	P00621 25	P00621 30	P00621 35	P00621 40
23	142.2	74.6	P00623 20	P00623 25	P00623 30	P00623 35	P00623 40
25	154.7	80.5	P00625 20	P00625 25	P00625 30	P00625 35	P00625 40

machined sprockets

820 / 831 / LBP 831 SERIES



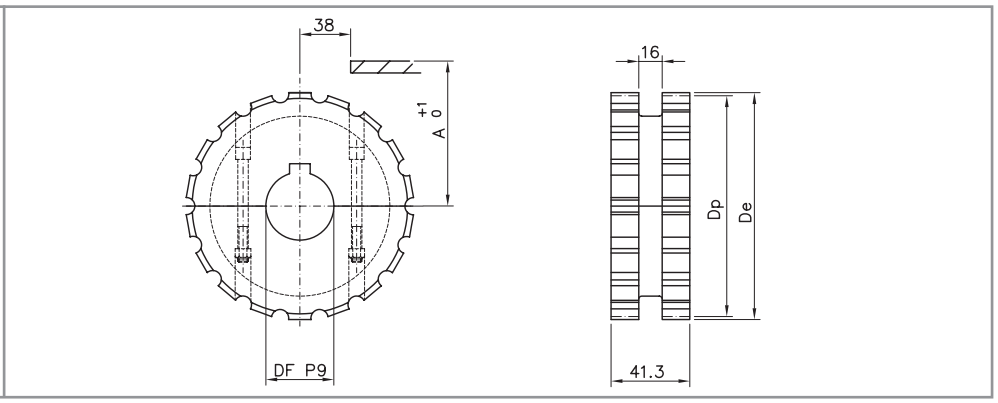

Split sprockets
material: polyamide - screws in stainless steel - UNI 6604-69 key seat

DIMENSIONS				PRODUCT CODE				
Z	De	Dp	A	DF 18*	DF 25	DF 30	DF 35	DF 40
17	103.9	105.47	55.9	S11617 18	S11617 25	S11617 30	S11617 35	S11617 40
19	117.0	117.34	61.9	S11619 18	S11619 25	S11619 30	S11619 35	S11619 40
21	129.0	129.26	67.8	S11621 18	S11621 25	S11621 30	S11621 35	S11621 40
23	142.0	141.21	73.8	S11623 18	S11623 25	S11623 30	S11623 35	S11623 40
25	154.0	153.21	79.8	S11625 18	S11625 25	S11625 30	S11625 35	S11625 40
27	166.8	165.20	85.8	S11627 18	S11627 25	S11627 30	S11627 35	S11627 40
29	178.5	177.24	91.8	S11629 18	S11629 25	S11629 30	S11629 35	S11629 40

* plain bore



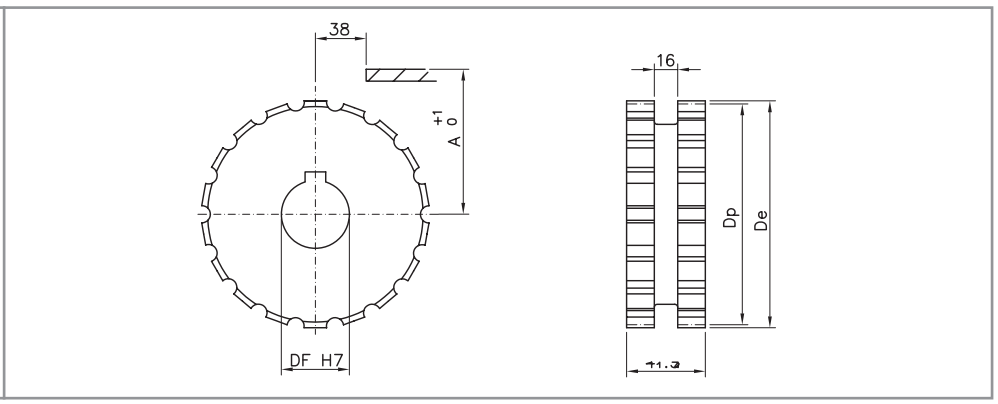

Standard sprockets
material: polyamide - UNI 6604 -69 key seat

DIMENSIONS				PRODUCT CODE			
Z	De	Dp	A	DF 25	DF 30	DF 35	DF 40
17	103.9	105.47	55.9	S01617 25	S01617 30	S01617 35	S01617 40
19	117.0	117.34	61.9	S01619 25	S01619 30	S01619 35	S01619 40
21	129.0	129.26	67.8	S01621 25	S01621 30	S01621 35	S01621 40
23	142.0	141.21	73.8	S01623 25	S01623 30	S01623 35	S01623 40
25	154.0	153.21	79.8	S01625 25	S01625 30	S01625 35	S01625 40
27	166.8	165.20	85.8	S01627 25	S01627 30	S01627 35	S01627 40
29	178.5	177.24	91.8	S01629 25	S01629 30	S01629 35	S01629 40

machined idler wheels

820 / 831 / LBP 831 SERIES



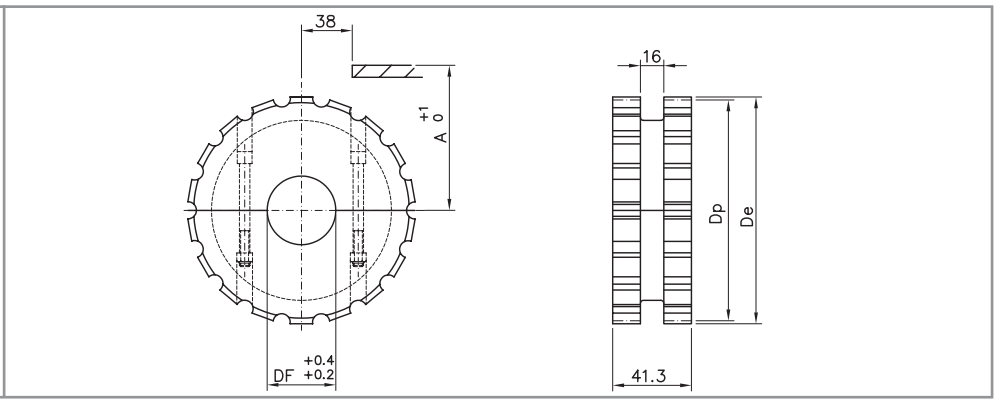

Split idler wheels
material: polyamide - screws in stainless steel

DIMENSIONS				PRODUCT CODE			
Z	De	Dp	A	DF 25	DF 30	DF 35	DF 40
17	103.9	105.47	55.9	R11617 25	R11617 30	R11617 35	R11617 40
19	117.0	117.34	61.9	R11619 25	R11619 30	R11619 35	R11619 40
21	129.0	129.26	67.8	R11621 25	R11621 30	R11621 35	R11621 40
23	142.0	141.21	73.8	R11623 25	R11623 30	R11623 35	R11623 40
25	154.0	153.21	79.8	R11625 25	R11625 30	R11625 35	R11625 40
27	166.8	165.20	85.8	R11627 25	R11627 30	R11627 35	R11627 40
29	178.5	177.24	91.8	R11629 25	R11629 30	R11629 35	R11629 40



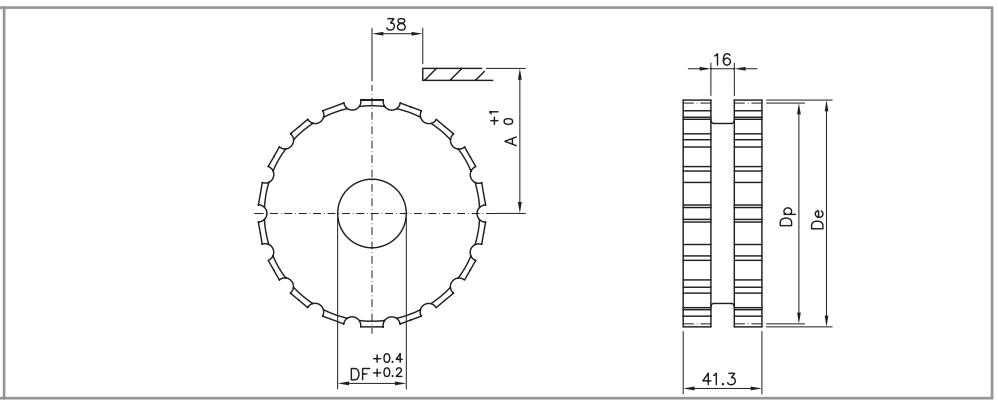

Standard idler wheels
material: polyamide

DIMENSIONS				PRODUCT CODE			
Z	De	Dp	A	DF 25	DF 30	DF 35	DF 40
17	103.9	105.47	55.9	R01617 25	R01617 30	R01617 35	R01617 40
19	117.0	117.34	61.9	R01619 25	R01619 30	R01619 35	R01619 40
21	129.0	129.26	67.8	R01621 25	R01621 30	R01621 35	R01621 40
23	142.0	141.21	73.8	R01623 25	R01623 30	R01623 35	R01623 40
25	154.0	153.21	79.8	R01625 25	R01625 30	R01625 35	R01625 40
27	166.8	165.20	85.8	R01627 25	R01627 30	R01627 35	R01627 40
29	178.5	177.24	91.8	R01629 25	R01629 30	R01629 35	R01629 40

machined idler wheels

820 / 831 / LBP 831 SERIES



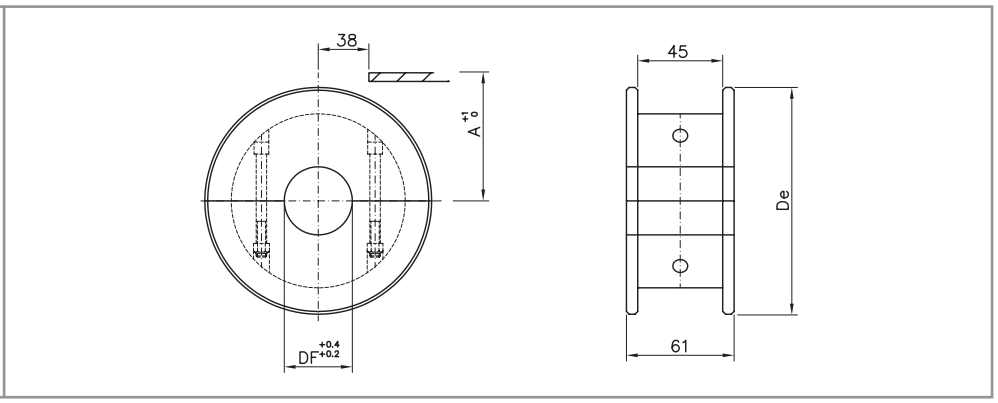

Split idler wheels
material: polyamide - screws in stainless steel

DIMENSIONS			PRODUCT CODE				
Z eq.	De	A	DF 20	DF 25	DF 30	DF 35	DF 40
17	104.0	56.2	P11617 20	P11617 25	P11617 30	P11617 35	P11617 40
19	117.0	62.6	P11619 20	P11619 25	P11619 30	P11619 35	P11619 40
21	129.8	68.6	P11621 20	P11621 25	P11621 30	P11621 35	P11621 40
23	142.2	74.6	P11623 20	P11623 25	P11623 30	P11623 35	P11623 40
25	154.7	80.5	P11625 20	P11625 25	P11625 30	P11625 35	P11625 40
27	167.2	88.5	P11627 20	P11627 25	P11627 30	P11627 35	P11627 40
29	179.3	92.8	P11629 20	P11629 25	P11629 30	P11629 35	P11629 40



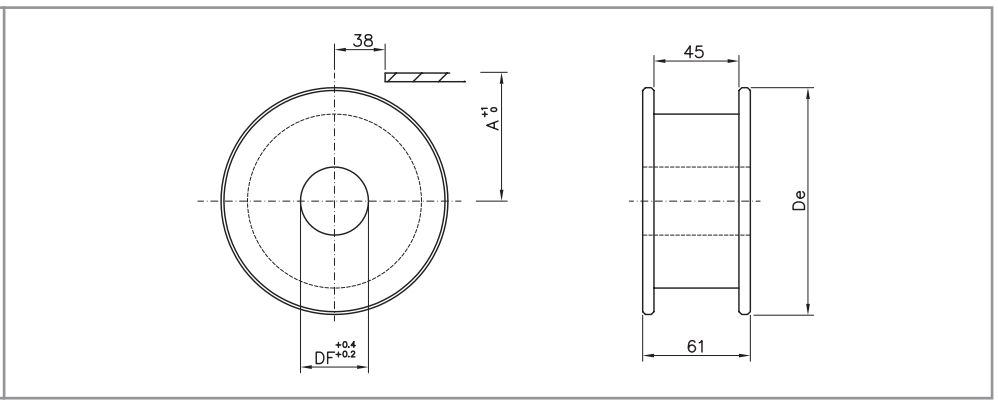

Standard idler wheels
material: polyamide

DIMENSIONS			PRODUCT CODE				
Z eq.	De	A	DF 20	DF 25	DF 30	DF 35	DF 40
17	104.0	56.2	P01617 20	P01617 25	P01617 30	P01617 35	P01617 40
19	117.0	62.6	P01619 20	P01619 25	P01619 30	P01619 35	P01619 40
21	129.8	68.6	P01621 20	P01621 25	P01621 30	P01621 35	P01621 40
23	142.2	74.6	P01623 20	P01623 25	P01623 30	P01623 35	P01623 40
25	154.7	80.5	P01625 20	P01625 25	P01625 30	P01625 35	P01625 40
27	167.2	88.5	P01627 20	P01627 25	P01627 30	P01627 35	P01627 40
29	179.3	92.8	P01629 20	P01629 25	P01629 30	P01629 35	P01629 40

injected sprockets and idler wheels

820 SERIES



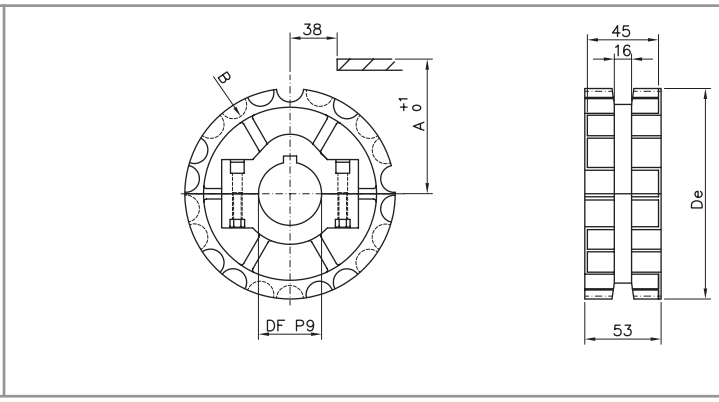

Split sprockets

material: reinforced polyamide - screws in stainless steel - nuts in nickel plated steel - UNI 6604 - 69 key seat

DIMENSIONS				PRODUCT CODE				
Z	De	B	A	DF 25	DF 30	DF 35	DF 40	DF 45
21	129.0	116.1	67.8	S10621 25	S10621 30	S10621 35	S10621 40	S10621 45
23	142.0	128.1	73.8	S10623 25	S10623 30	S10623 35	S10623 40	S10623 45
25	154.0	140.1	79.8	S10625 25	S10625 30	S10625 35	S10625 40	S10625 45



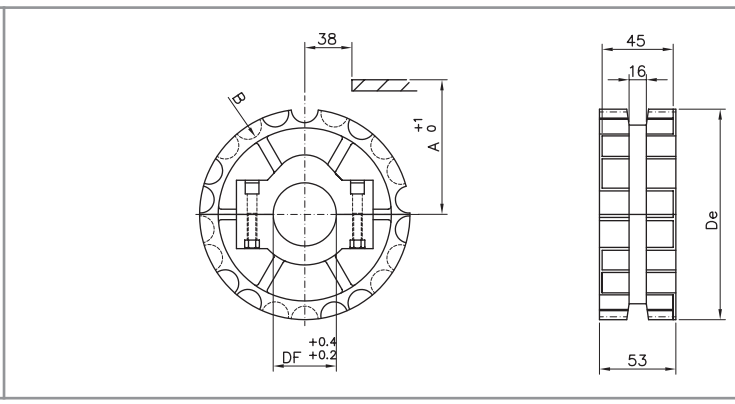

Split idler wheels

material: polyamide - screws in stainless steel - nuts in nickel plated steel

DIMENSIONS				PRODUCT CODE				
Z	De	B	A	DF 25	DF 30	DF 35	DF 40	DF 45
21	129.0	116.1	67.8	R10621 25	R10621 30	R10621 35	R10621 40	R10621 45
23	142.0	128.1	73.8	R10623 25	R10623 30	R10623 35	R10623 40	R10623 45
25	154.0	140.1	79.8	R10625 25	R10625 30	R10625 35	R10625 40	R10625 45

injected sprockets

820 SERIES



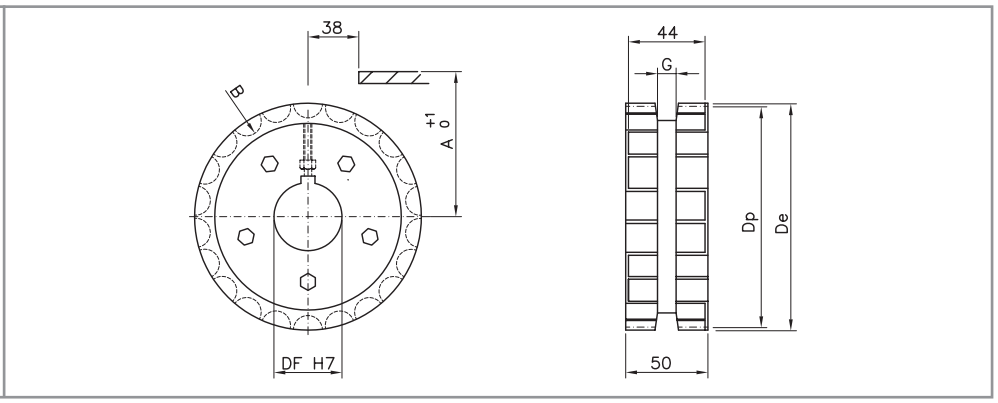

Standard sprockets
material: reinforced polyamide - screws in stainless steel / UNI 6604-69 key seat

DIMENSIONS						PRODUCT CODE			
Z	De	Dp	A	B	G	DF 25	DF 30	DF 35	DF 40
15	92.2	93.67	-	-	-	S00615 25	S00615 30	/	/
17	103.9	105.47	56.0	92.3	13.0	S00617 25	S00617 30	/	/
19	117.0	117.34	62.0	104.2	16.0	S00619 25	S00619 30	S00619 35	S00619 40
21	129.0	129.26	68.0	116.1	16.0	S00621 25	S00621 30	S00621 35	S00621 40
23	142.0	141.21	74.0	128.1	16.0	S00623 25	S00623 30	S00623 35	S00623 40
25	154.0	153.21	80.0	140.1	16.0	S00625 25	S00625 30	S00625 35	S00625 40

831 / LBP 831 SERIES



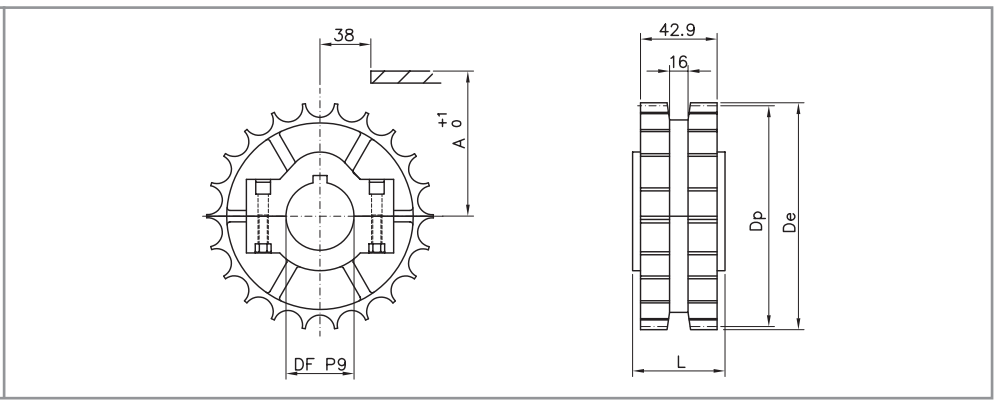

Split sprockets
material: reinforced polyamide - screws in stainless steel - nuts in nickel plated steel / UNI 6604-69 key seat

DIMENSIONS					PRODUCT CODE				
Z	De	Dp	A	L	DF 25	DF 30	DF 35	DF 40	DF 45
21	129.5	129.26	67.8	51.0	D10621 25	D10621 30	D10621 35	D10621 40	D10621 45
23	142.0	141.22	73.8	51.0	D10623 25	D10623 30	D10623 35	D10623 40	D10623 45
25	154.2	153.21	79.8	58.5	D10625 25	D10625 30	D10625 35	D10625 40	D10625 45

injected idler wheels

820 / 831 / LBP 831 SERIES



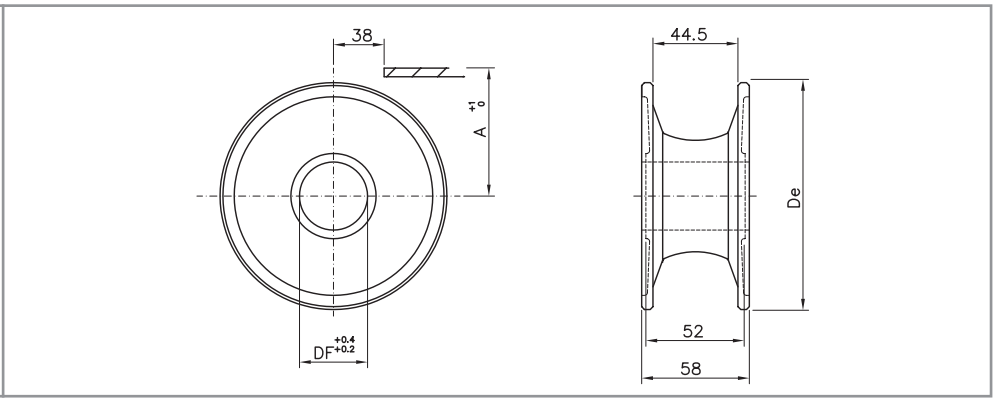

Standard idler wheels

material: self-lubricating polyamide / colour: black

DIMENSIONS			PRODUCT CODE				
Z eq.	De	A	DF 20	DF 25	DF 30	DF 35	DF 40
15	95.5	92.0	/	P00615 25	P00615 30	/	/
17	106.5	57.0	/	P00617 25	P00617 30	/	/
18	113.0	92.0	/	P00618 25	P00618 30	/	/
19	117.0	62.6	P00619 20	P00619 25	P00619 30	P00619 35	P00619 40
21	129.8	68.6	P00621 20	P00621 25	P00621 30	P00621 35	P00621 40
23	142.2	74.6	P00623 20	P00623 25	P00623 30	P00623 35	P00623 40
25	154.7	80.5	P00625 20	P00625 25	P00625 30	P00625 35	P00625 40



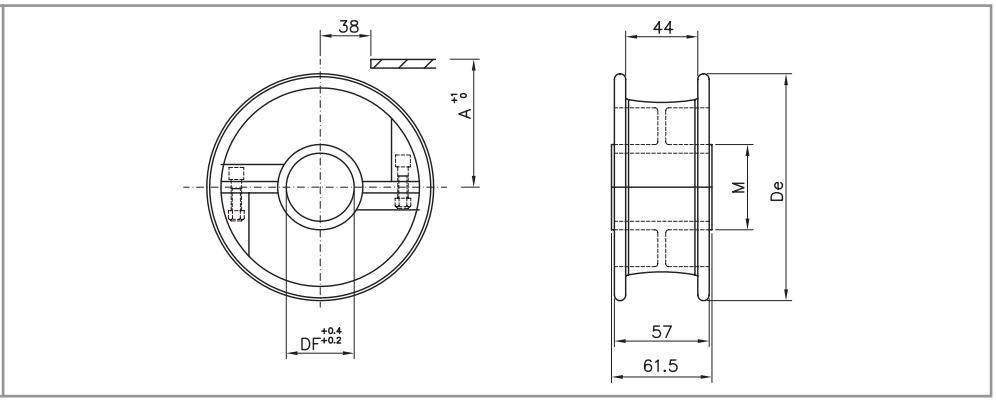

Split idler wheels

material: self-lubricating polyamide - screws in stainless steel / colour: black

DIMENSIONS			PRODUCT CODE			
Z eq.	De	A	DF 25	DF 30	DF 35	DF 40
21	130.0	48.2	P10621 25	P10621 30	P10621 35	P10621 40
23	142.5	74.6	P10623 25	P10623 30	P10623 35	P10623 40
25	154.5	80.5	P10625 25	P10625 30	P10625 35	P10625 40

injected idler wheels

820 / 831 / LBP 831 SERIES



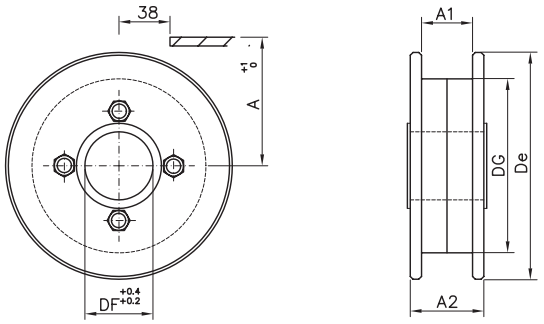

Standard idler wheels
material: self-lubricating polyamide / colour: black

DIMENSIONS						PRODUCT CODE				
Z eq.	De	Dg	A	A1	A2	DF 25	DF 30	DF 35	DF 40	DF 45
15	90.0	58.0	48.2	48.0	83.0	/	K00615 30	K00615 35	K00615 40	K00615 45
17	106.0	71.0	56.2	44.0	52.0	K00617 25	K00617 30	/	/	/
19	118.0	80.0	62.6	44.0	60.0	K00619 25	K00619 30	K00619 35	K00619 40	/
21	129.8	80.0	68.6	44.0	60.0	K00621 25	K00621 30	K00621 35	K00621 40	/
23	142.5	108.0	74.6	44.0	60.0	K00623 25	K00623 30	K00623 35	K00623 40	/
25	155.0	108.0	74.6	44.0	60.0	K00625 25	K00625 30	K00625 35	K00625 40	/

machined sprockets

821 / LBP 821 SERIES

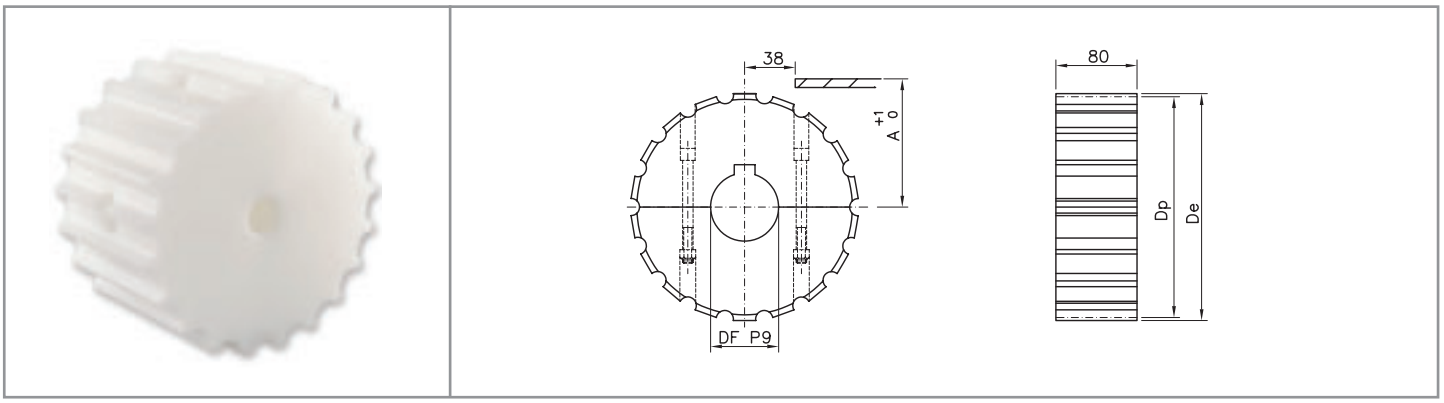

Split sprockets

material: polyamide - screws in stainless steel / UNI 6604-69 key seat

DIMENSIONS				PRODUCT CODE				
Z	De	Dp	A	DF 18*	DF 25	DF 30	DF 35	DF 40
19	117.0	117.34	61.9	S11719 18	S11719 25	S11719 30	S11719 35	S11719 40
21	129.0	129.26	67.8	S11721 18	S11721 25	S11721 30	S11721 35	S11721 40
23	142.0	141.21	73.8	S11723 18	S11723 25	S11723 30	S11723 35	S11723 40
25	154.0	153.21	79.8	S11725 18	S11725 25	S11725 30	S11725 35	S11725 40
27	166.8	165.20	85.8	S11727 18	S11727 25	S11727 30	S11727 35	S11727 40
29	178.5	177.24	91.8	S11729 18	S11729 25	S11729 30	S11729 35	S11729 40

* plain bore

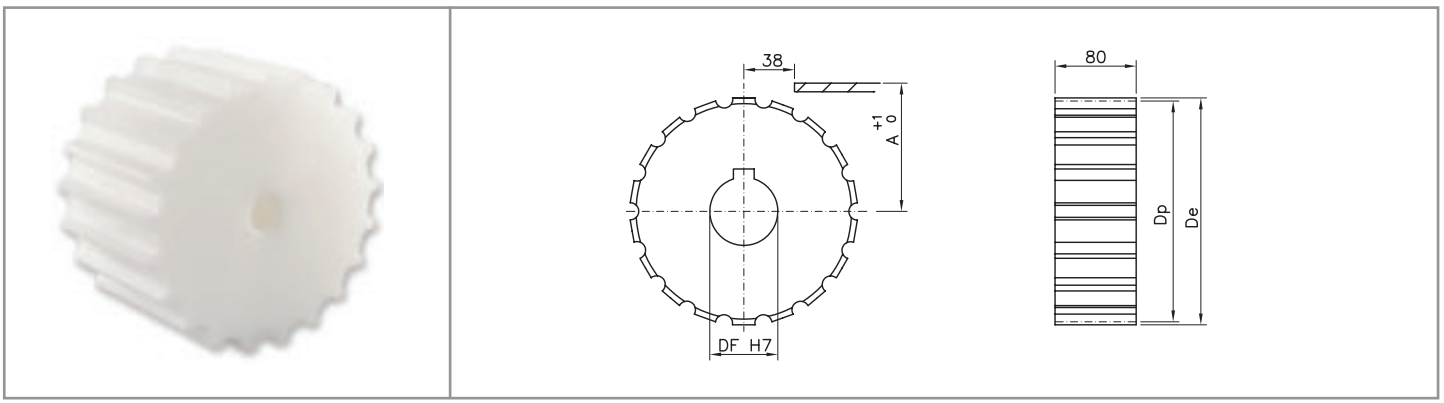

Standard sprockets

material: polyamide / UNI 6604-69 key seat

DIMENSIONS				PRODUCT CODE			
Z	De	Dp	A	DF 25	DF 30	DF 35	DF 40
19	117.0	117.34	61.9	S01719 25	S01719 30	S01719 35	S01719 40
21	129.0	129.26	67.8	S01721 25	S01721 30	S01721 35	S01721 40
23	142.0	141.21	73.8	S01723 25	S01723 30	S01723 35	S01723 40
25	154.0	153.21	79.8	S01725 25	S01725 30	S01725 35	S01725 40
27	166.8	165.20	85.8	S01727 25	S01727 30	S01727 35	S01727 40
29	178.5	177.24	91.8	S01729 25	S01729 30	S01729 35	S01729 40

machined idler wheels

821 / LBP 821 SERIES



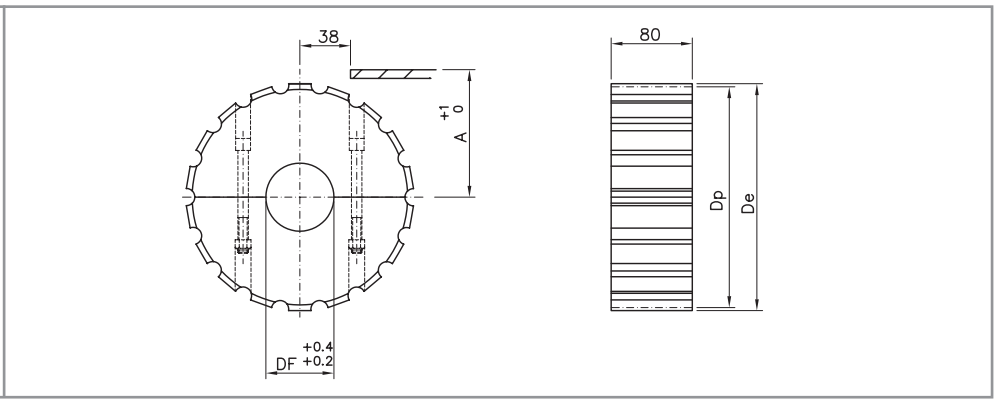

Split idler wheels
material: polyamide - screws in stainless steel

DIMENSIONS				PRODUCT CODE			
Z	De	Dp	A	DF 25	DF 30	DF 35	DF 40
19	117.0	117.34	61.9	R11719 25	R11719 30	R11719 35	R11719 40
21	129.0	129.26	67.8	R11721 25	R11721 30	R11721 35	R11721 40
23	142.0	141.21	73.8	R11723 25	R11723 30	R11723 35	R11723 40
25	154.0	153.21	79.8	R11725 25	R11725 30	R11725 35	R11725 40
27	166.8	165.20	85.8	R11727 25	R11727 30	R11727 35	R11727 40
29	178.5	177.24	91.8	R11729 25	R11729 30	R11729 35	R11729 40



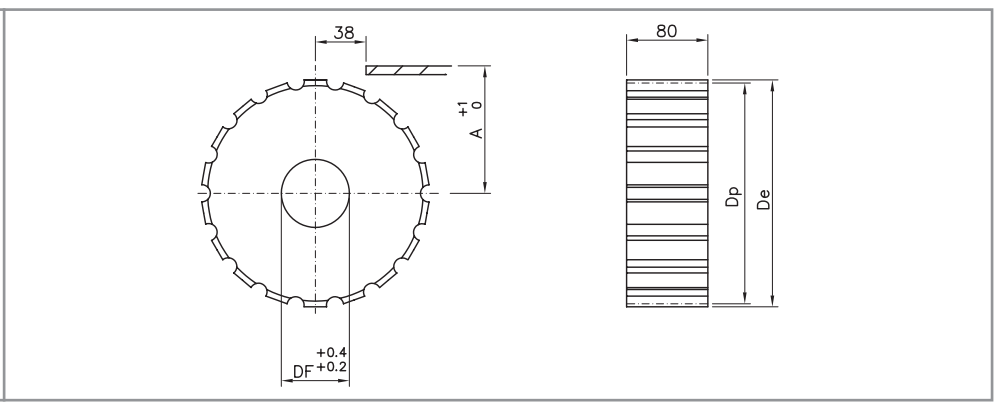

Standard idler wheels
material: polyamide

DIMENSIONS				PRODUCT CODE			
Z	De	Dp	A	DF 25	DF 30	DF 35	DF 40
19	117.0	117.34	61.9	R01719 25	R01719 30	R01719 35	R01719 40
21	129.0	129.26	67.8	R01721 25	R01721 30	R01721 35	R01721 40
23	142.0	141.21	73.8	R01723 25	R01723 30	R01723 35	R01723 40
25	154.0	153.21	79.8	R01725 25	R01725 30	R01725 35	R01725 40
27	166.8	165.20	85.8	R01727 25	R01727 30	R01727 35	R01727 40
29	178.5	177.24	91.8	R01729 25	R01729 30	R01729 35	R01729 40

machined idler wheels

821 / LBP 821 SERIES



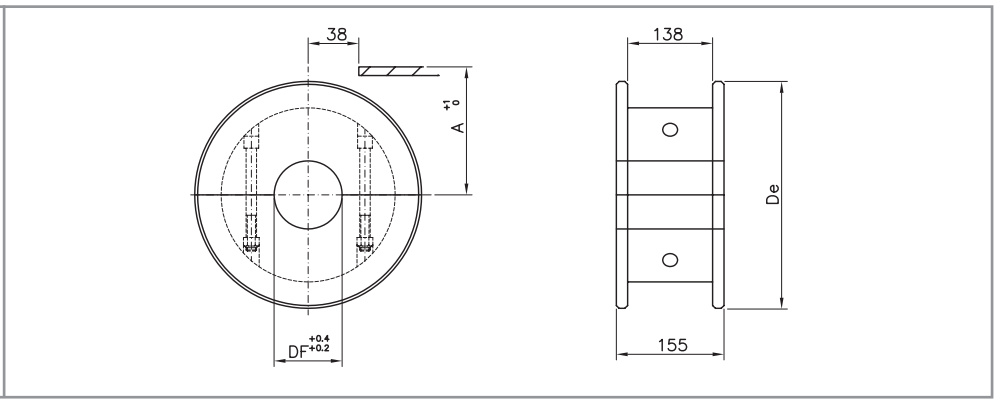

Split idler wheels
material: polyamide - screws in stainless steel

DIMENSIONS			PRODUCT CODE		
Z eq.	De	A	DF 30	DF 35	DF 40
19	117.0	62.6	P11719 30	P11719 35	P11719 40
21	129.8	68.6	P11721 30	P11721 35	P11721 40
23	142.2	74.6	P11723 30	P11723 35	P11723 40
25	154.7	80.5	P11725 30	P11725 35	P11725 40



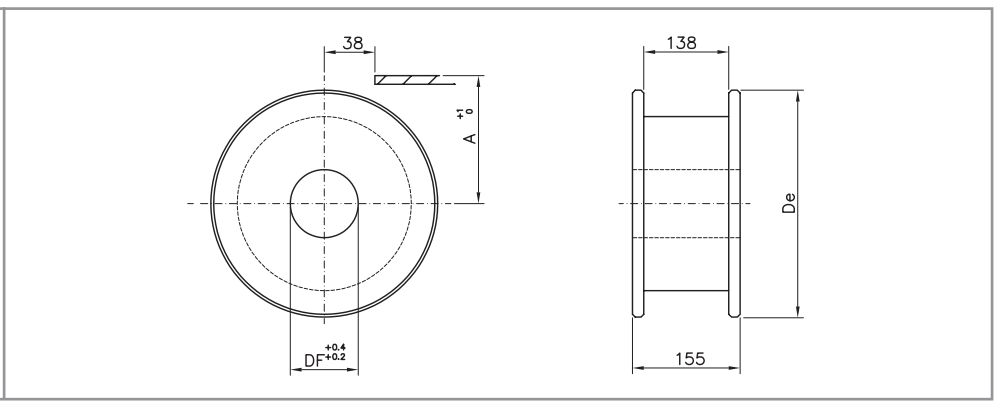

Standard idler wheels
material: polyamide

DIMENSIONS			PRODUCT CODE		
Z eq.	De	A	DF 30	DF 35	DF 40
19	117.0	62.6	P01719 30	P01719 35	P01719 40
21	129.8	68.6	P01721 30	P01721 35	P01721 40
23	142.2	74.6	P01723 30	P01723 35	P01723 40
25	154.7	80.5	P01725 30	P01725 35	P01725 40

injected sprockets and idler wheels

821 / LBP 821 SERIES



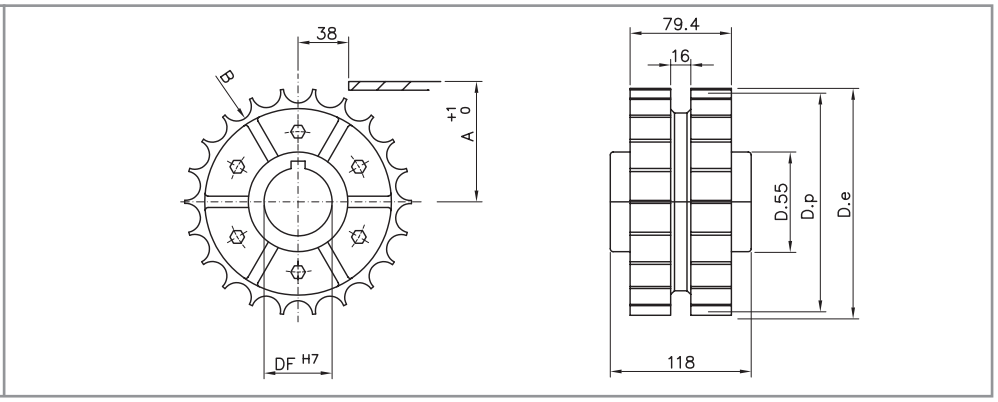

Drive sprockets

material: reinforced polyamide - screws in stainless steel - UNI 6604 - 69 key seat

DIMENSIONS					PRODUCT CODE			
Z	De	Dp	A	B	DF 25	DF 30	DF 35	DF 40
25	154.0	153.2	79.8	140.1	S00725 25	S00725 30	S00725 35	S00725 40



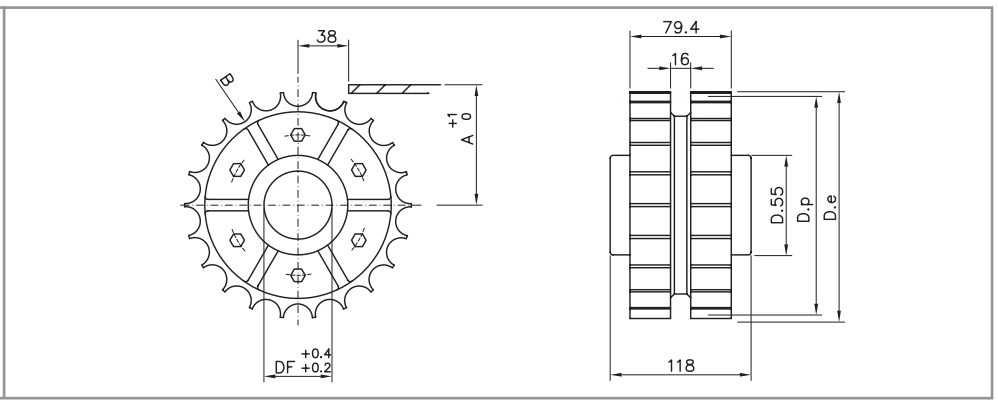

Standard idler wheels

material: polyamide - screws in stainless steel - nuts in nickel plated brass

DIMENSIONS					PRODUCT CODE			
Z	De	Dp	A	B	DF 25	DF 30	DF 35	DF 40
25	154.0	153.2	79.8	140.1	R00725 25	R00725 30	R00725 35	R00725 40

injected sprockets and idler wheels

821 / LBP 821 SERIES



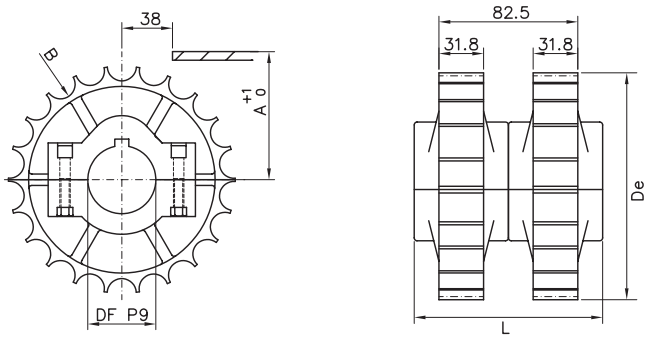

Split sprockets

material: reinforced polyamide - screws in stainless steel - nuts in nickel plated brass - UNI 6604 - 69 key seat

DIMENSIONS						PRODUCT CODE		
Z	De	Dp	A	B	L	DF 35	DF 40	DF 45
21	129.5	129.26	67.8	140.1	102.0	S10721 35	S10721 40	S10721 45
23	142.0	141.22	73.8	140.1	102.0	S10723 35	S10723 40	S10723 45
25	154.2	153.21	79.8	140.1	117.0	S10725 35	S10725 40	S10725 45



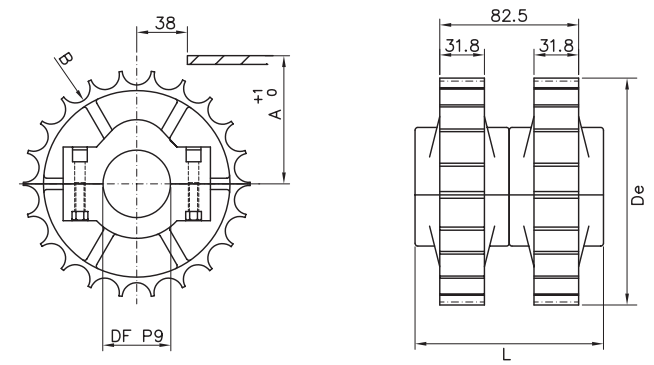

Split idler wheels

material: reinforced polyamide - screws in stainless steel - nuts in nickel plated brass

DIMENSIONS						PRODUCT CODE		
Z	De	Dp	A	B	L	DF 35	DF 40	DF 45
21	129.5	129.26	67.8	140.1	102.0	R10721 35	R10721 40	R10721 45
23	142.0	141.22	73.8	140.1	102.0	R10723 35	R10723 40	R10723 45
25	154.2	153.21	79.8	140.1	117.0	R10725 35	R10725 40	R10725 45

injected idler wheels

821 / LBP 821 SERIES



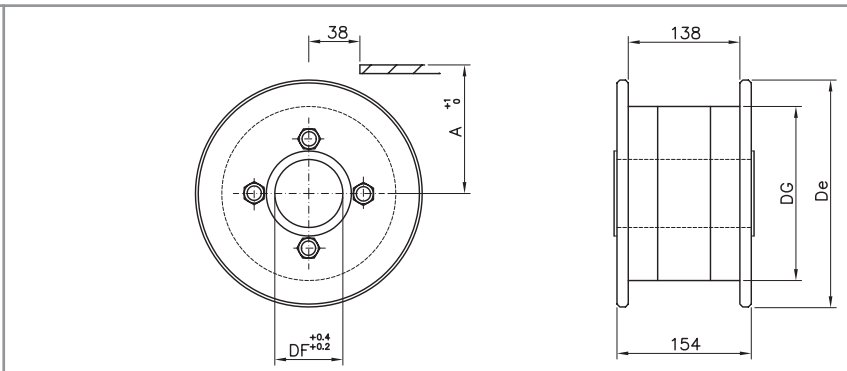

Standard idler wheels

material: self-lubrificating polyamide - screws in zinc plated steel / colour: black

DIMENSIONS				PRODUCT CODE			
Z eq.	De	DG	A	DF 25	DF 30	DF 35	DF 40
19	118.0	80.0	62.6	K00719 25	K00719 30	K00719 35	K00719 40
21	128.0	80.0	68.6	K00721 25	K00721 30	K00721 35	K00721 40
23	142.5	108.0	74.6	K00723 25	K00723 30	K00723 35	K00723 40
25	155.0	108.0	80.5	K00725 25	K00725 30	K00725 35	K00725 40

machined sprockets

878 TAB / 879 / 879 TAB / 879 M / 880 / 880TAB / 880 M SERIES



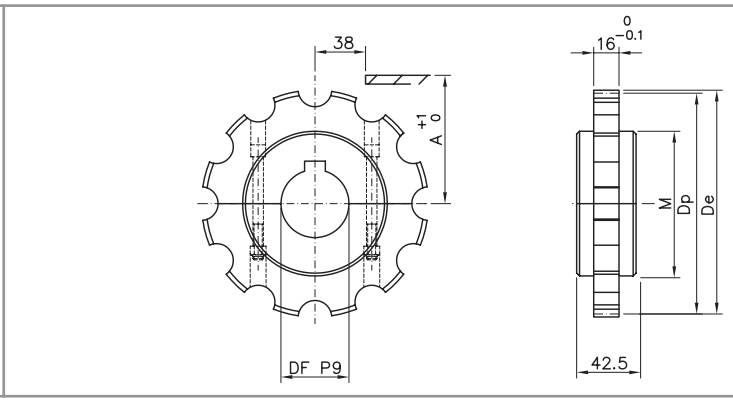

Split sprockets
material: polyamide - screws in stainless steel - UNI 6604-69 key seat

DIMENSIONS						PRODUCT CODE				
Z	De	Dp	A	B	M	DF 18*	DF 25	DF 30	DF 35	DF 40
09	110.0	111.4	59.3	95.0	75.0	S11809 18	S11809 25	S11809 30	S11809 35	S11809 40
10	122.0	123.3	65.25	107.0	85.0	S11810 18	S11810 25	S11810 30	S11810 35	S11810 40
11	135.0	135.2	71.2	119.0	90.0	S11811 18	S11811 25	S11811 30	S11811 35	S11811 40
12	147.3	147.2	77.2	131.0	95.0	S11812 18	S11812 25	S11812 30	S11812 35	S11812 40

* plain bore



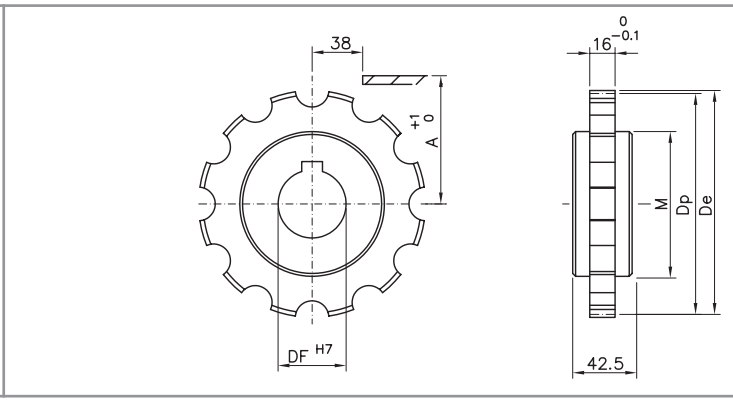

Standard sprockets
material: polyamide - UNI 6604-69 key seat

DIMENSIONS						PRODUCT CODE			
Z	De	Dp	A	B	M	DF 25	DF 30	DF 35	DF 40
09	110.0	111.4	59.3	95.0	75.0	S01809 25	S01809 30	S01809 35	S01809 40
10	122.0	123.3	65.25	107.0	85.0	S01810 25	S01810 30	S01810 35	S01810 40
11	135.0	135.2	71.2	119.0	90.0	S01811 25	S01811 30	S01811 35	S01811 40
12	147.3	147.2	77.2	131.0	95.0	S01812 25	S01812 30	S01812 35	S01812 40

machined idler wheels

878 TAB / 879 / 879 TAB / 879 M / 880 / 880TAB / 880 M SERIES



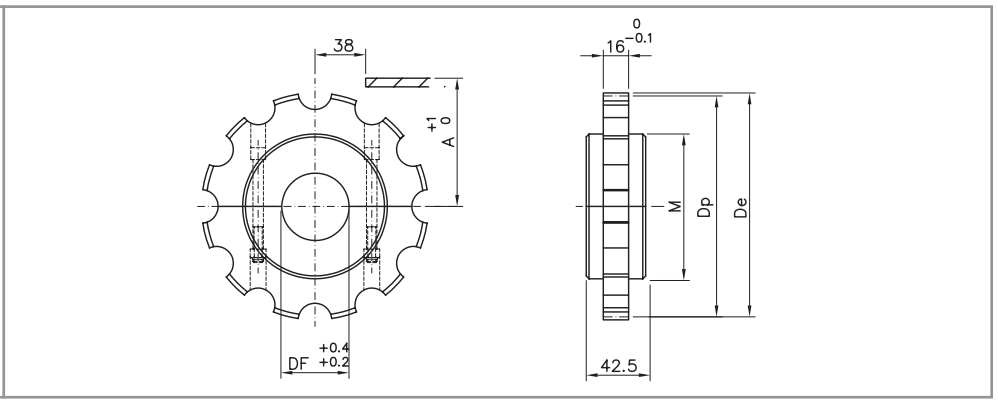

Split idler wheels
material: polyamide - screws in stainless steel

DIMENSIONS						PRODUCT CODE				
Z	De	Dp	A	B	M	DF 18*	DF 25	DF 30	DF 35	DF 40
09	110.0	111.4	59.3	95.0	75.0	R11809 18	R11809 25	R11809 30	R11809 35	R11809 40
10	122.0	123.3	65.25	107.0	85.0	R11810 18	R11810 25	R11810 30	R11810 35	R11810 40
11	135.0	135.2	71.2	119.0	90.0	R11811 18	R11811 25	R11811 30	R11811 35	R11811 40
12	147.3	147.2	77.2	131.0	95.0	R11812 18	R11812 25	R11812 30	R11812 35	R11812 40

* plain bore



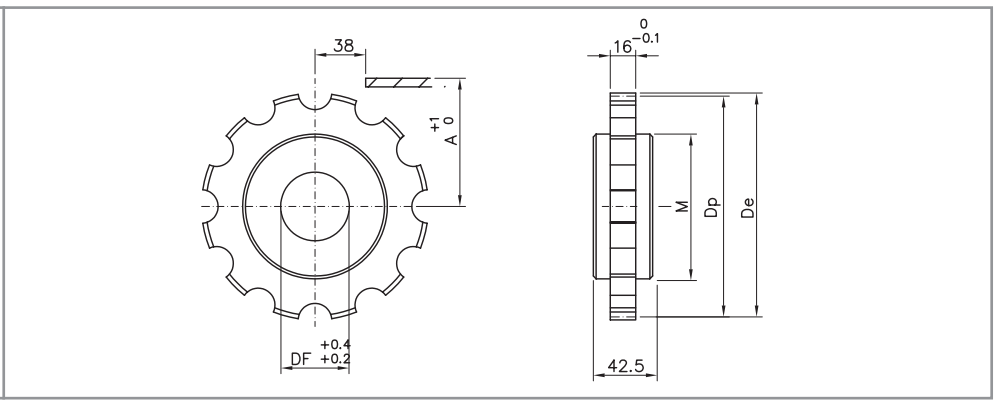

Standard idler wheels
material: polyamide

DIMENSIONS						PRODUCT CODE			
Z	De	Dp	A	B	M	DF 25	DF 30	DF 35	DF 40
09	110.0	111.4	59.3	95.0	75.0	R01809 25	R01809 30	R01809 35	R01809 40
10	122.0	123.3	65.25	107.0	85.0	R01810 25	R01810 30	R01810 35	R01810 40
11	135.0	135.2	71.2	119.0	90.0	R01811 25	R01811 30	R01811 35	R01811 40
12	147.3	147.2	77.2	131.0	95.0	R01812 25	R01812 30	R01812 35	R01812 40

machined idler wheels

879 / 879 M / 880 / 880 M SERIES



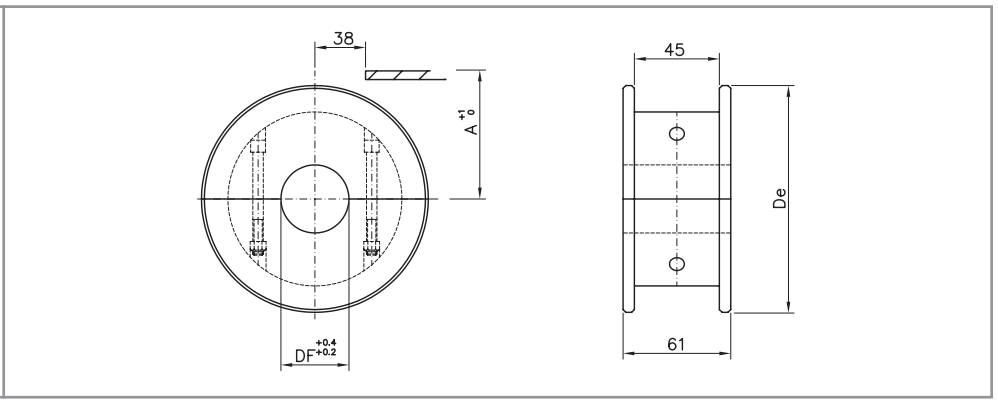

Split idler wheels
material: polyamide - screws in stainless steel

DIMENSIONS			PRODUCT CODE				
Z eq.	De	A	DF 20	DF 25	DF 30	DF 35	DF 40
9	117.0	62.6	P11609 20	P11609 25	P11609 30	P11609 35	P11609 40
10	129.8	68.6	P11610 20	P11610 25	P11610 30	P11610 35	P11610 40
11	142.2	74.6	P11611 20	P11611 25	P11611 30	P11611 35	P11611 40
12	154.7	80.5	P11612 20	P11612 25	P11612 30	P11612 35	P11612 40



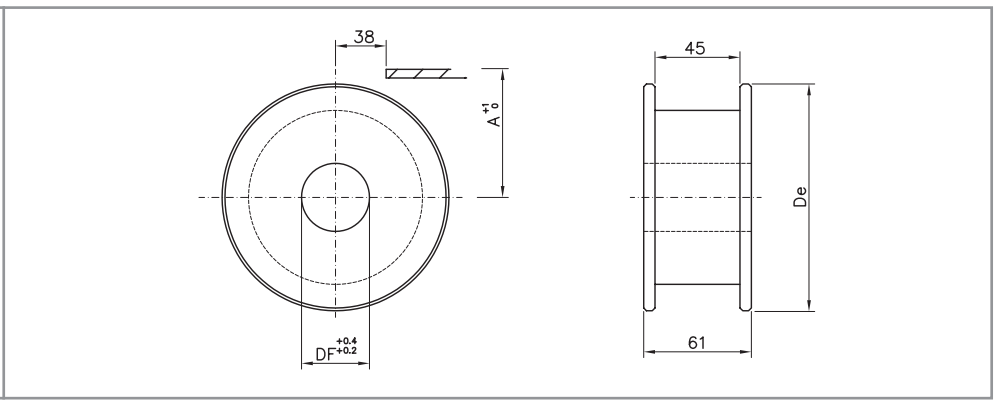

Standard idler wheels
material: polyamide

DIMENSIONS			PRODUCT CODE				
Z eq.	De	A	DF 20	DF 25	DF 30	DF 35	DF 40
9	117.0	62.6	P01609 20	P01609 25	P01609 30	P01609 35	P01609 40
10	129.8	68.6	P01610 20	P01610 25	P01610 30	P01610 35	P01610 40
11	142.2	74.6	P01611 20	P01611 25	P01611 30	P01611 35	P01611 40
12	154.7	80.5	P01612 20	P01612 25	P01612 30	P01612 35	P01612 40

machined idler wheels

878 TAB / 879 TAB / 880 TAB SERIES



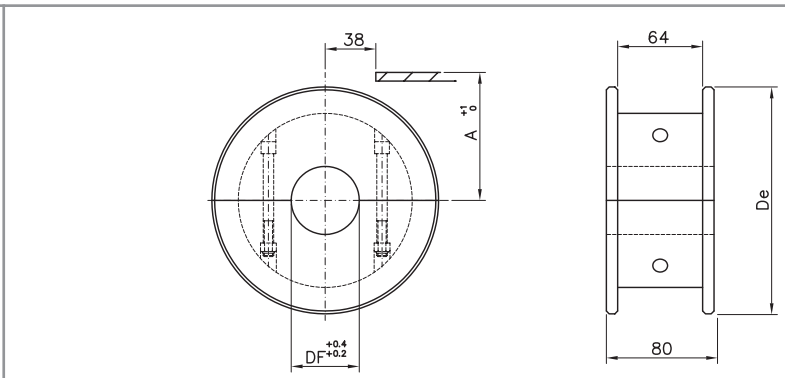

Split idler wheels
material: polyamide - screws in stainless steel

DIMENSIONS			PRODUCT CODE				
Z eq.	De	A	DF 20	DF 25	DF 30	DF 35	DF 40
9	117.0	62.1	B11809 20	B11809 25	B11809 30	B11809 35	B11809 40
10	129.8	68.5	B11810 20	B11810 25	B11810 30	B11810 35	B11810 40
11	142.2	74.7	B11811 20	B11811 25	B11811 30	B11811 35	B11811 40
12	154.7	80.9	B11812 20	B11812 25	B11812 30	B11812 35	B11812 40



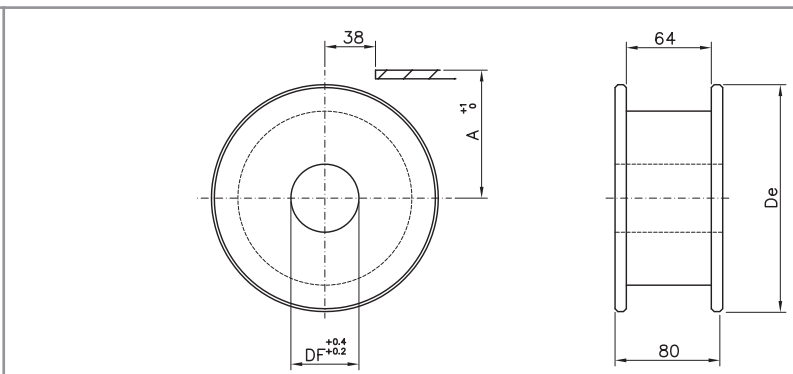

Standard idler wheels
material: polyamide

DIMENSIONS			PRODUCT CODE				
Z eq.	De	A	DF 20	DF 25	DF 30	DF 35	DF 40
9	117.0	62.1	B01809 20	B01809 25	B01809 30	B01809 35	B01809 40
10	129.8	68.5	B01810 20	B01810 25	B01810 30	B01810 35	B01810 40
11	142.2	74.7	B01811 20	B01811 25	B01811 30	B01811 35	B01811 40
12	154.7	80.9	B01812 20	B01812 25	B01812 30	B01812 35	B01812 40

injected sprockets and idler wheels

878 TAB / 879 TAB / 880 TAB SERIES



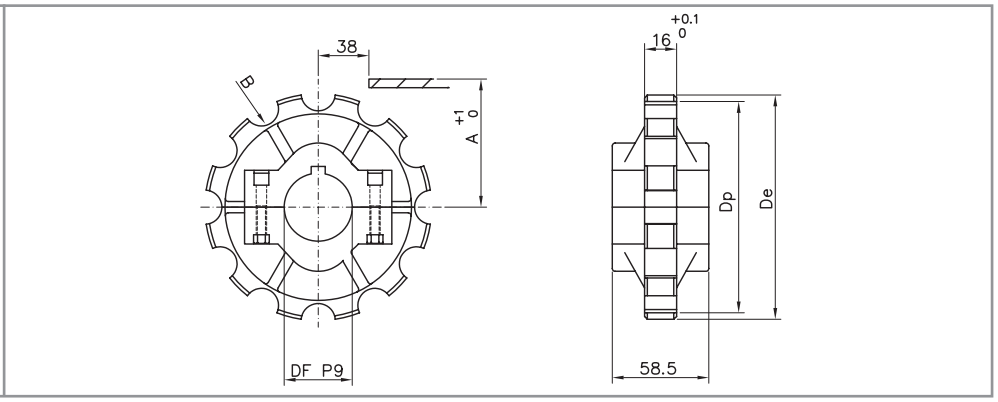

Split sprockets

material: reinforced polyamide - screws in stainless steel, nuts in nickel plated brass / UNI 6604-69 key seat

DIMENSIONS					PRODUCT CODE			
Z	De	Dp	A	B	DF 25	DF 30	DF 35	DF 40
10	122.0	123.3	65.25	107.0	S10810 25	S10810 30	S10810 35	S10810 40
12	147.0	146.8	77.2	131.0	S10812 25	S10812 30	S10812 35	S10812 40



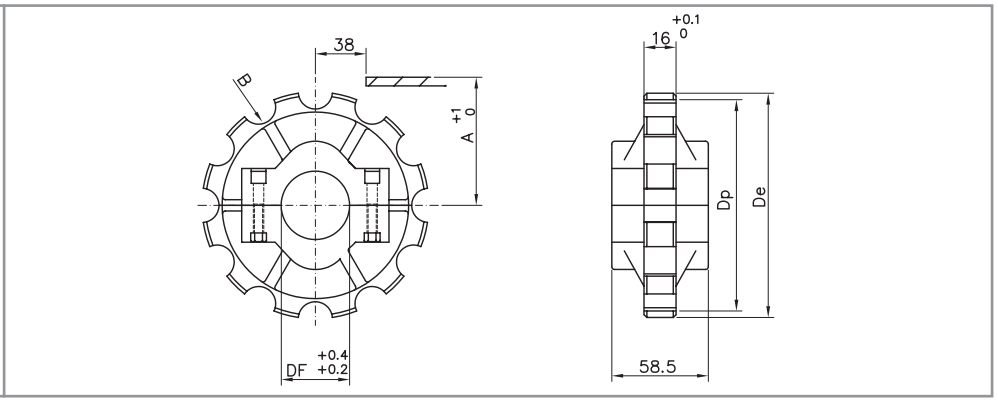

Split idler wheels

material: polyamide - screws in stainless steel, nuts in nickel plated brass

DIMENSIONS					PRODUCT CODE			
Z	De	Dp	A	B	DF 25	DF 30	DF 35	DF 40
10	122.0	123.3	65.25	107.0	R10810 25	R10810 30	R10810 35	R10810 40
12	147.0	146.8	77.2	131.0	R10812 25	R10812 30	R10812 35	R10812 40

injected idler wheels

879 / 879 M / 880 / 880 M SERIES



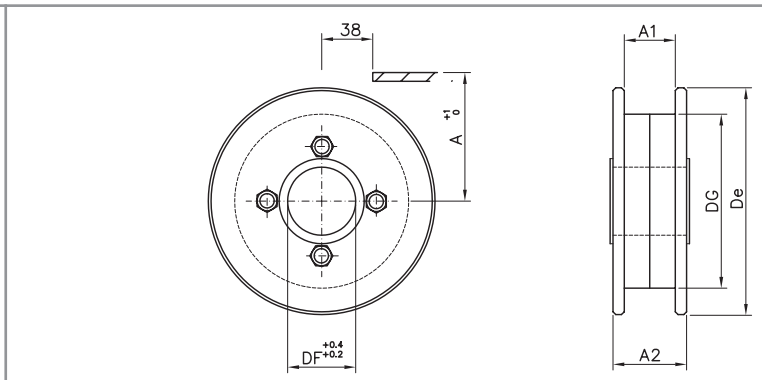

Idler wheels
material: self-lubricating polyamide - screws in zinc plated steel

DIMENSIONS						PRODUCT CODE			
Z eq.	De	DG	A	A1	A2	DF 25	DF 30	DF 35	DF 40
08	106.0	71.0	56.2	44.0	52.0	K00608 25	K00608 30	/	/
09	118.0	80.0	62.6	44.0	60.0	K00609 25	K00609 30	K00609 35	K00609 40
10	129.8	80.0	68.6	44.0	60.0	K00610 25	K00610 30	K00610 35	K00610 40
11	142.5	108.0	74.6	44.0	60.0	K00611 25	K00611 30	K00611 35	K00611 40
12	155.0	108.0	80.5	44.0	60.0	K00612 25	K00612 30	K00612 35	K00612 40

878 TAB / 879 TAB / 880 TAB SERIES



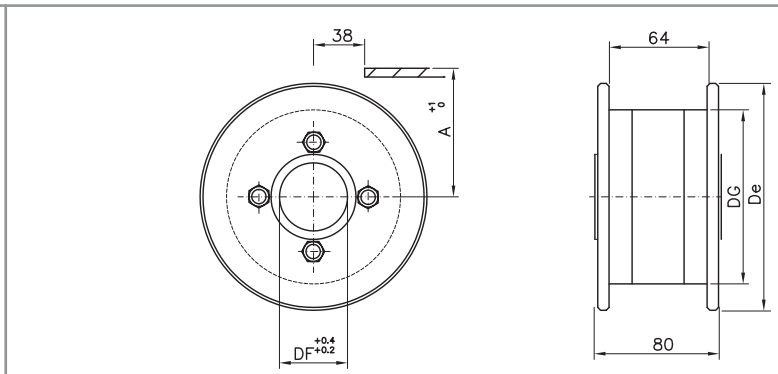

Idler wheels
material: self-lubricating polyamide - screws in zinc plated steel

DIMENSIONS				PRODUCT CODE			
Z eq.	De	DG	A	DF 25	DF 30	DF 35	DF 40
09	118.0	80.0	62.6	T00809 25	T00809 30	T00809 35	T00809 40
10	129.8	80.0	68.6	T00810 25	T00810 30	T00810 35	T00810 40
11	142.5	108.0	74.6	T00811 25	T00811 30	T00811 35	T00811 40
12	155.0	108.0	80.5	T00812 25	T00812 30	T00812 35	T00812 40

machined sprockets

882 / 882 TAB / 882 M / 8257 / LBP8257 / LBP882M / LBP882TAB Series



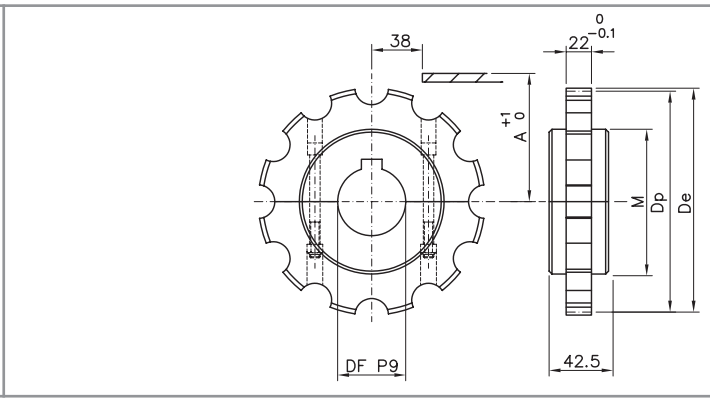

Split sprockets

material: polyamide - screws in stainless steel - UNI 6604-69 key seat

DIMENSIONS						PRODUCT CODE				
Z	De	Dp	A	B	M	DF 18*	DF 25	DF 30	DF 35	DF 40
09	112.0	111.4	60.5	92.1	60.0	S11909 18	S11909 25	S11909 30	S11909 35	S11909 40
10	125.0	123.2	66.4	104.0	75.0	S11910 18	S11910 25	S11910 30	S11910 35	S11910 40
11	137.0	135.2	72.4	116.0	85.0	S11911 18	S11911 25	S11911 30	S11911 35	S11911 40
12	149.0	147.2	78.4	127.9	90.0	S11912 18	S11912 25	S11912 30	S11912 35	S11912 40

* plain bore



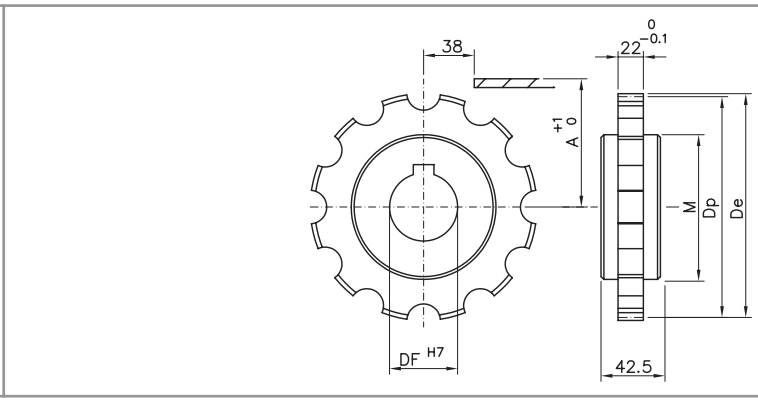

Standard sprockets

material: polyamide - UNI 6604-69 key seat

DIMENSIONS						PRODUCT CODE		
Z	De	Dp	A	B	M	DF 30	DF 35	DF 40
09	112.0	111.4	60.5	92.1	60.0	S01909 30	S01909 35	S01909 40
10	125.0	123.2	66.4	104.0	75.0	S01910 30	S01910 35	S01910 40
11	137.0	135.2	72.4	116.0	85.0	S01911 30	S01911 35	S01911 40
12	149.0	147.2	78.4	127.9	90.0	S01912 30	S01912 35	S01912 40

machined idler wheels

882 / 882 TAB / 882 M / 8257 / LBP8257 / LBP882M / LBP882TAB Series



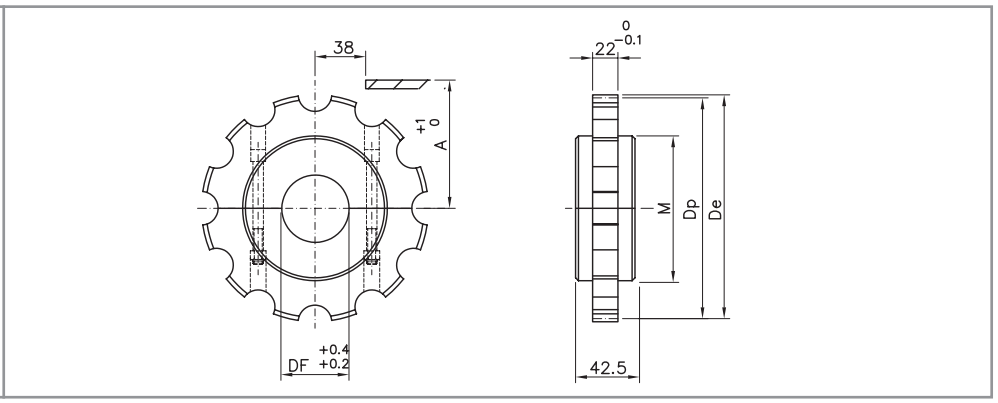

Split idler wheels
material: polyamide - screws in stainless steel

DIMENSIONS						PRODUCT CODE		
Z	De	Dp	A	B	M	DF 30	DF 35	DF 40
09	112.0	111.4	60.5	92.1	60.0	R11909 30	R11909 35	R11909 40
10	125.0	123.2	66.4	104.0	75.0	R11910 30	R11910 35	R11910 40
11	137.0	135.2	72.4	116.0	85.0	R11911 30	R11911 35	R11911 40
12	149.0	147.2	78.4	127.9	90.0	R11912 30	R11912 35	R11912 40



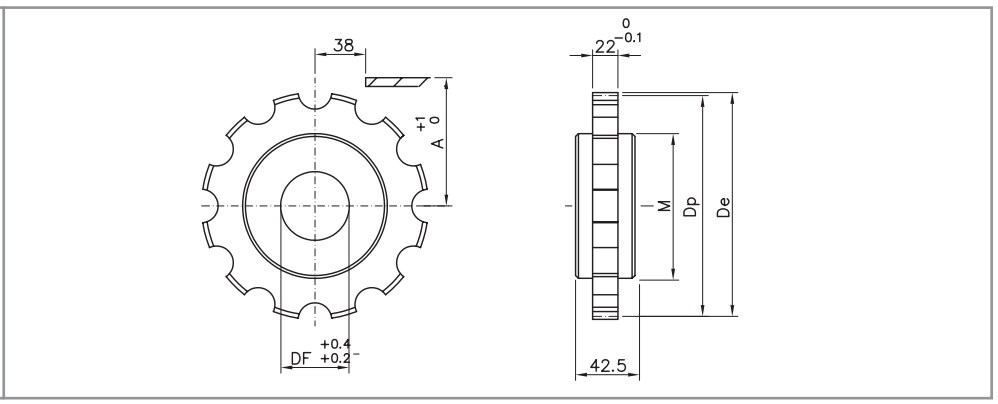

Standard idler wheels
material: polyamide

DIMENSIONS						PRODUCT CODE		
Z	De	Dp	A	B	M	DF 30	DF 35	DF 40
09	112.0	111.4	60.5	92.1	60.0	R01909 30	R01909 35	R01909 40
10	125.0	123.2	66.4	104.0	75.0	R01910 30	R01910 35	R01910 40
11	137.0	135.2	72.4	116.0	85.0	R01911 30	R01911 35	R01911 40
12	149.0	147.2	78.4	127.9	90.0	R01912 30	R01912 35	R01912 40

machined idler wheels

882 TAB / LBP882TAB SERIES



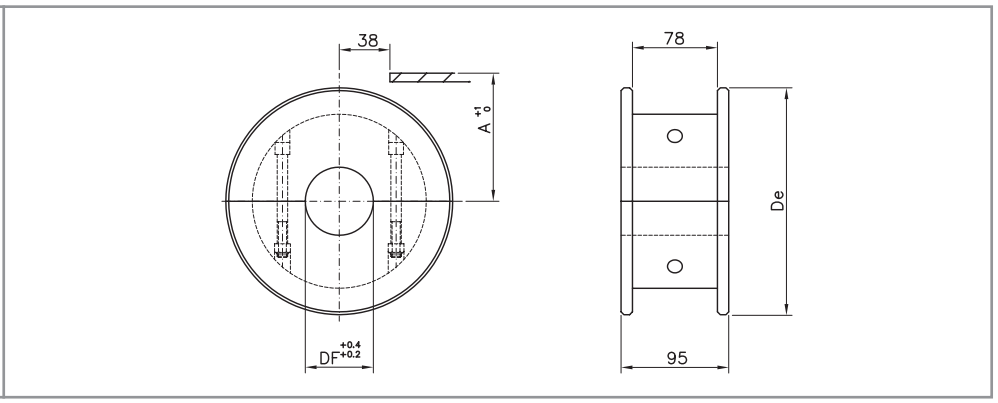

Split idler wheels
material: polyamide - screws in stainless steel

DIMENSIONS			PRODUCT CODE				
Z eq.	De	A	DF 20	DF 25	DF 30	DF 35	DF 40
9	117.0	63.8	B11909 20	B11909 25	B11909 30	B11909 35	B11909 40
10	129.8	69.5	B11910 20	B11910 25	B11910 30	B11910 35	B11910 40
11	142.2	75.9	B11911 20	B11911 25	B11911 30	B11911 35	B11911 40
12	154.7	82.1	B11912 20	B11912 25	B11912 30	B11912 35	B11912 40



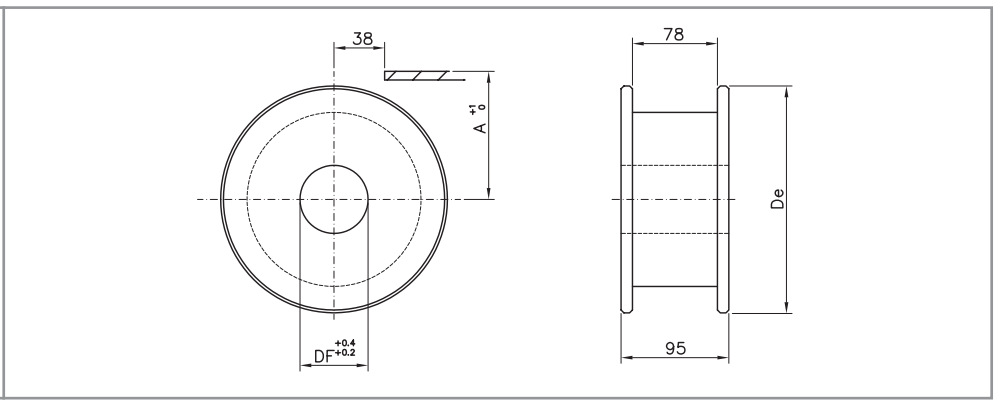

Standard idler wheels
material: polyamide

DIMENSIONS			PRODUCT CODE				
Z eq.	De	A	DF 20	DF 25	DF 30	DF 35	DF 40
9	117.0	63.8	B01909 20	B01909 25	B01909 30	B01909 35	B01909 40
10	129.8	69.5	B01910 20	B01910 25	B01910 30	B01910 35	B01910 40
11	142.2	75.9	B01911 20	B01911 25	B01911 30	B01911 35	B01911 40
12	154.7	82.1	B01912 20	B01912 25	B01912 30	B01912 35	B01912 40

machined idler wheels

882 M / 8257 / LBP8257 / LBP882M SERIES



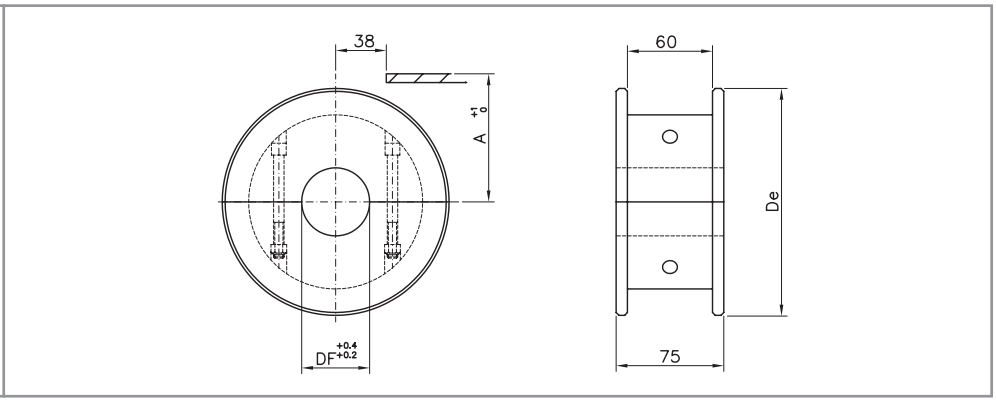

Split idler wheels
material: polyamide - screws in stainless steel

DIMENSIONS			PRODUCT CODE				
Z eq.	De	A	DF 20	DF 25	DF 30	DF 35	DF 40
17	104.0	56.2	P11417 20	P11417 25	P11417 30	P11417 35	P11417 40
19	117.0	62.6	P11419 20	P11419 25	P11419 30	P11419 35	P11419 40
21	129.8	68.6	P11421 20	P11421 25	P11421 30	P11421 35	P11421 40
23	142.2	74.6	P11423 20	P11423 25	P11423 30	P11423 35	P11423 40
25	154.7	80.5	P11425 20	P11425 25	P11425 30	P11425 35	P11425 40
27	167.2	86.5	P11427 20	P11427 25	P11427 30	P11427 35	P11427 40
29	179.3	92.8	P11429 20	P11429 25	P11429 30	P11429 35	P11429 40



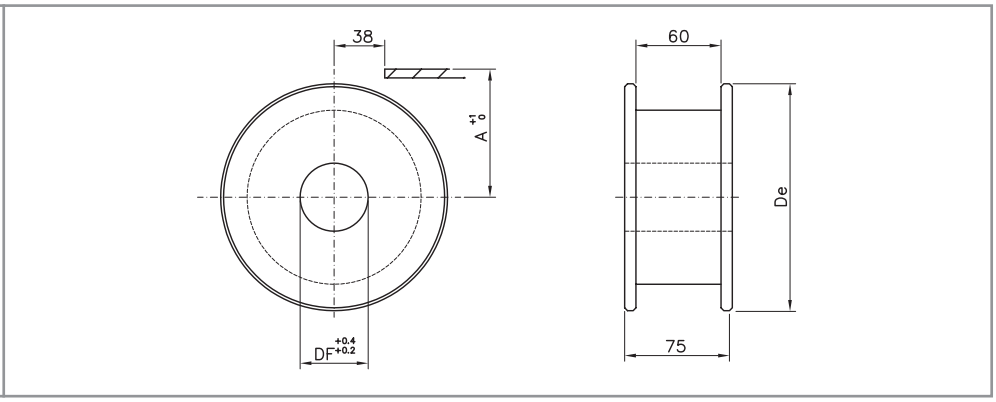

Standard idler wheels
material: polyamide

DIMENSIONS			PRODUCT CODE				
Z eq.	De	A	DF 20	DF 25	DF 30	DF 35	DF 40
17	104.0	56.2	P01417 20	P01417 25	P01417 30	P01417 35	P01417 40
19	117.0	62.6	P01419 20	P01419 25	P01419 30	P01419 35	P01419 40
21	129.8	68.6	P01421 20	P01421 25	P01421 30	P01421 35	P01421 40
23	142.2	74.6	P01423 20	P01423 25	P01423 30	P01423 35	P01423 40
25	154.7	80.5	P01425 20	P01425 25	P01425 30	P01425 35	P01425 40
27	167.2	86.5	P01427 20	P01427 25	P01427 30	P01427 35	P01427 40
29	179.3	92.8	P01429 20	P01429 25	P01429 30	P01429 35	P01429 40

injected sprockets and idler wheels

882 / 882 TAB / 882 M / LBP 8257 SERIES



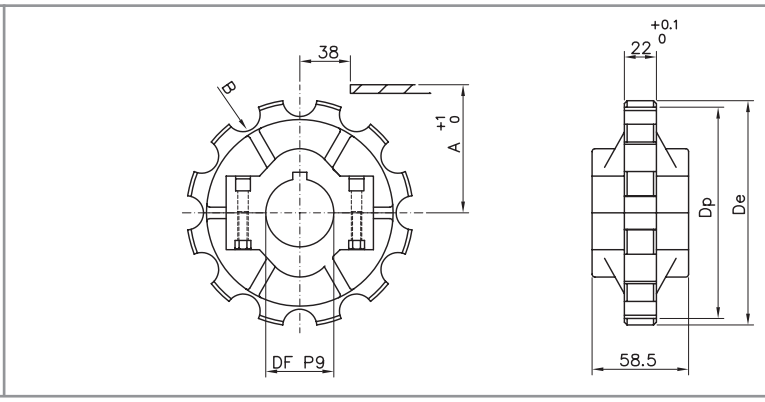

Split sprockets

material: reinforced polyamide - screws in stainless steel, nuts in nickel plated brass / UNI 6604-69 key seat

DIMENSIONS					PRODUCT CODE			
Z	De	Dp	A	B	DF 25	DF 30	DF 35	DF 40
10	125.0	123.3	65.4	104.0	S10910 25	S10910 30	S10910 35	S10910 40
12	149.2	147.2	78.4	128.0	S10912 25	S10912 30	S10912 35	S10912 40



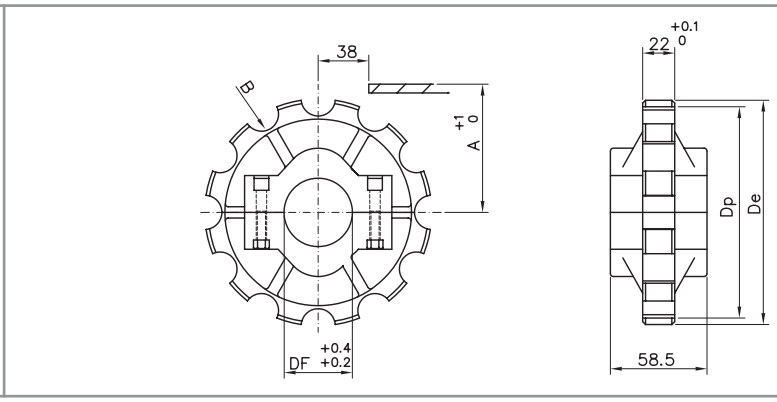

Split idler wheels

material: polyamide - screws in stainless steel, nuts in nickel plated brass

DIMENSIONS					PRODUCT CODE			
Z	De	Dp	A	B	DF 25	DF 30	DF 35	DF 40
10	125.0	123.3	65.4	104.0	R10910 25	R10910 30	R10910 35	R10910 40
12	149.2	147.2	78.4	128.0	R10912 25	R10912 30	R10912 35	R10912 40

injected idler wheels

882 M / 8257 / LBP 8257 / LBP 882 M SERIES



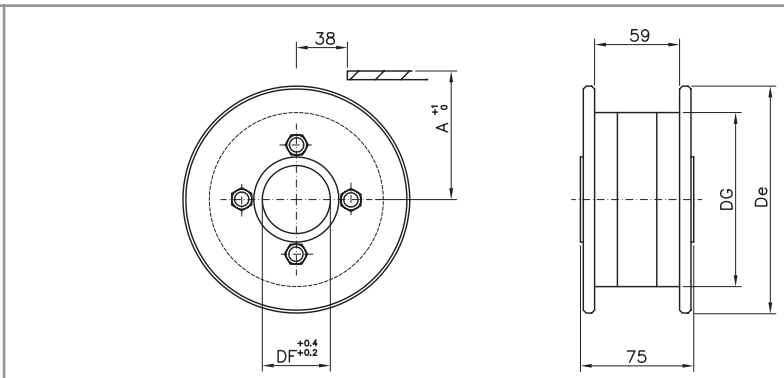

Standard idler wheels
material: self-lubrificating polyamide - screws in zink plated steel

DIMENSIONS				PRODUCT CODE			
Z eq.	De	DG	A	DF 25	DF 30	DF 35	DF 40
19	118.0	80.0	62.6	K00419 25	K00419 30	K00419 35	K00419 40
21	129.8	80.0	68.6	K00421 25	K00421 30	K00421 35	K00421 40
23	142.5	108.0	74.6	K00423 25	K00423 30	K00423 35	K00423 40
25	155.0	108.0	80.5	K00425 25	K00425 30	K00425 35	K00425 40

882 TAB / LBP 882 TAB SERIES



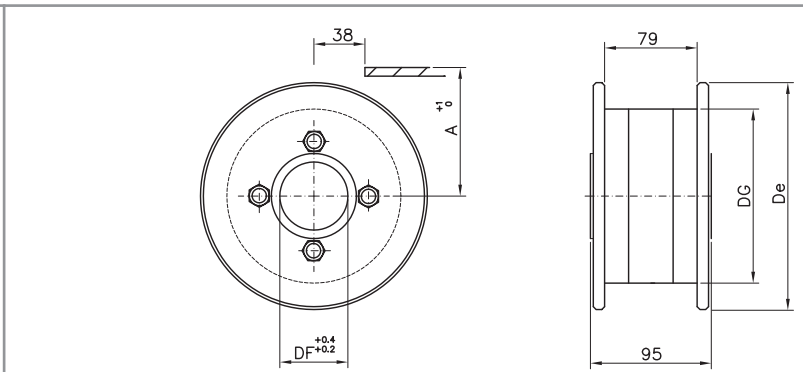

Standard idler wheels
material: self-lubricating polyamide - screws in zinc plated steel

DIMENSIONS				PRODUCT CODE			
Z eq.	De	DG	A	DF 25	DF 30	DF 35	DF 40
10	129.8	80.0	68.6	T00910 25	T00910 30	T00910 35	T00910 40
12	155.0	108.0	80.5	T00912 25	T00912 30	T00912 35	T00912 40

injected sprockets and idler wheels

780 M / 780 MFG / 780 TAB / 780 FG TAB / 790 M / 790 TAB SERIES



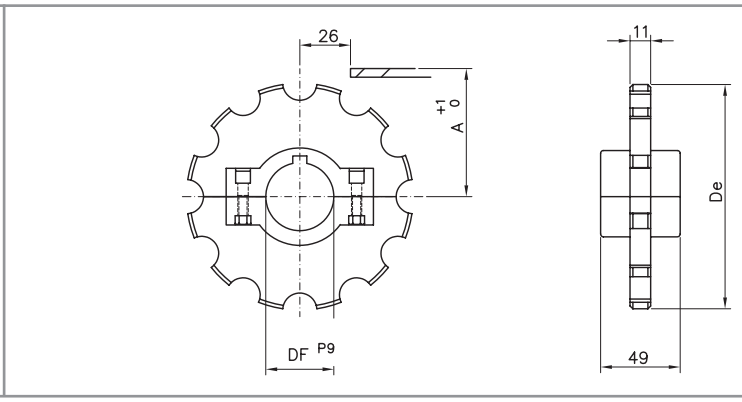

Split sprockets
material: reinforced polyamide - screws in stainless steel - UNI 6604-69 key seat

DIMENSIONS				PRODUCT CODE			
Z	De	Dp	A	DF 30	DF 35	DF 40	DF 45
16	130.9	128.9	67.8	S10A16 30	S10A16 35	S10A16 40	S10A16 45
18	146.8	144.8	75.7	S10A18 30	S10A18 35	S10A18 40	S10A18 45
19	156.3	154.3	80.5	S10A19 30	S10A19 35	S10A19 40	S10A19 45



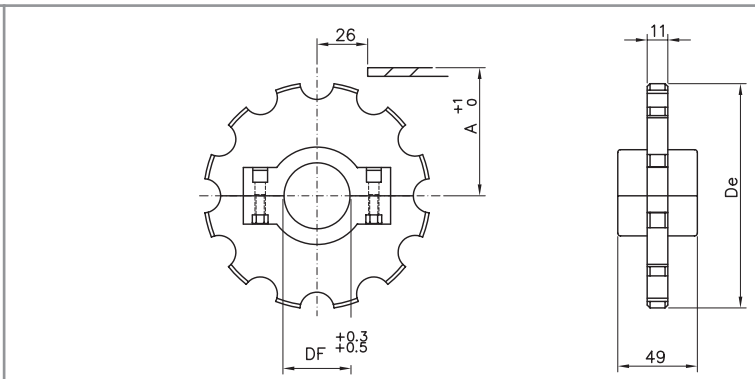

Split idler wheels
material: polyamide - screws in stainless steel

DIMENSIONS				PRODUCT CODE			
Z	De	Dp	A	DF 30	DF 35	DF 40	DF 45
16	130.9	128.9	67.8	R10A16 30	R10A16 35	R10A16 40	R10A16 45
18	146.8	144.8	75.7	R10A18 30	R10A18 35	R10A18 40	R10A18 45
19	156.3	154.3	80.5	R10A19 30	R10A19 35	R10A19 40	R10A19 45

machined sprockets

780 M / 780 MFG / 780 TAB / 780 FG TAB / 790 TAB SERIES



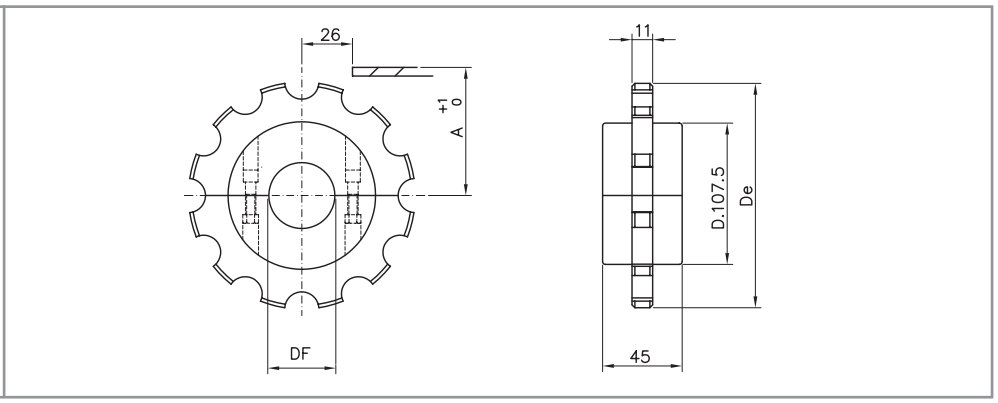

Split sprockets
material: polyamide in PA white - screws in stainless steel

DIMENSIONS				PRODUCT CODE					
Z	De	Dp	A	DF 25	DF 30	DF 35	DF 40	DF 45	DF 50
16	130.9	128.9	67.8	S11A16 25	S11A16 30	S11A16 35	S11A16 40	S11A16 45	S11A16 50
18	146.8	144.8	75.7	S11A18 25	S11A18 30	S11A18 35	S11A18 40	S11A18 45	S11A18 50
19	156.3	154.3	80.5	S11A19 25	S11A19 30	S11A19 35	S11A19 40	S11A19 45	S11A19 50

machined sprockets

1500 / 1700 / 1701 / 1702 / 1703 SERIES



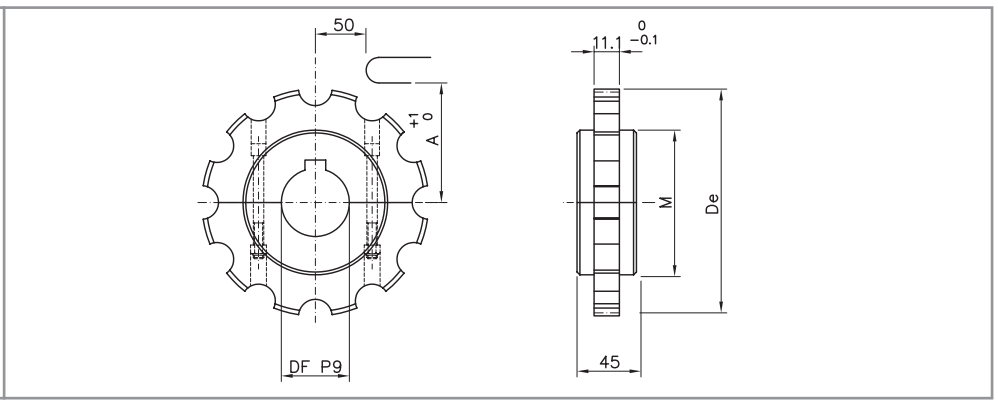

Split sprockets
material: polyamide - screws in stainless steel - UNI 6604-69 key seat

DIMENSIONS					PRODUCT CODE				
Z	De	Dp	A	M	DF 19*	DF 25	DF 30	DF 35	DF 40
08	132.8	130.65	53.3	79.0	S11M08 19	S11M08 25	S11M08 30	S11M08 35	S11M08 40
10	165.1	161.8	68.9	110.0	S11M10 19	S11M10 25	S11M10 30	S11M10 35	S11M10 40
13	215.2	208.95	92.5	158.0	S11M13 19	S11M13 25	S11M13 30	S11M13 35	S11M13 40

* plain bore

machined sprockets and idler wheels

1500 / 1700 / 1701 / 1702 / 1703 SERIES



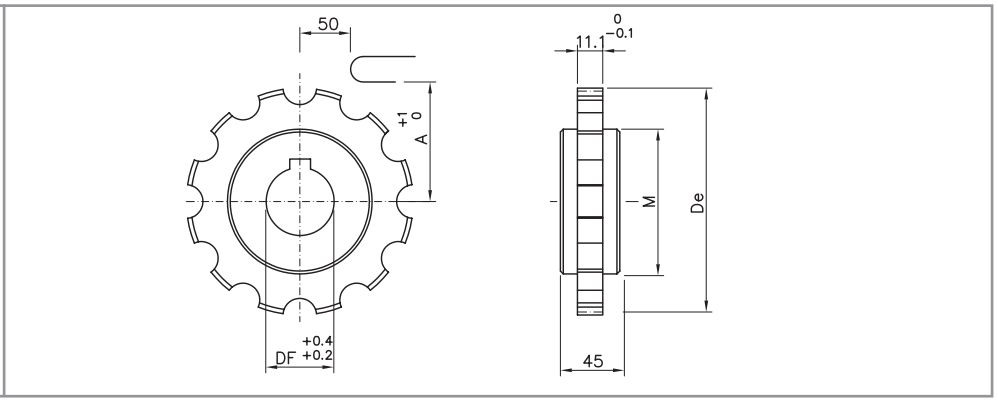

Standard sprockets

material: polyamide

DIMENSIONS					PRODUCT CODE				
Z	De	Dp	A	M	DF 20*	DF 25	DF 30	DF 35	DF 40
08	132.8	130.65	53.3	79.0	S01M08 20	S01M08 25	S01M08 30	S01M08 35	S01M08 40
10	165.1	161.80	68.9	110.0	S01M10 20	S01M10 25	S01M10 30	S01M10 35	S01M10 40
13	215.2	208.95	92.5	158.0	S01M13 20	S01M13 25	S01M13 30	S01M13 35	S01M13 40

* plain bore



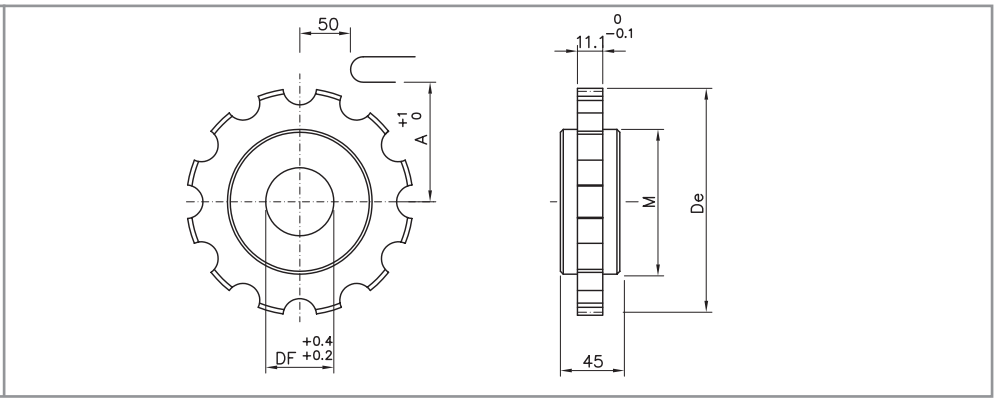

Standard idler wheels

material: polyamide

DIMENSIONS					PRODUCT CODE				
Z	De	Dp	A	M	DF 19*	DF 25	DF 30	DF 35	DF 40
08	132.8	130.65	53.3	79.0	R01M08 19	R01M08 25	R01M08 30	R01M08 35	R01M08 40
10	165.1	161.80	68.9	110.0	R01M10 19	R01M10 25	R01M10 30	R01M10 35	R01M10 40
13	215.2	208.95	92.5	158.0	R01M13 19	R01M13 25	R01M13 30	R01M13 35	R01M13 40

* plain bore

injected sprockets and idler wheels

1500 / 1700 / 1701 / 1702 / 1703 SERIES



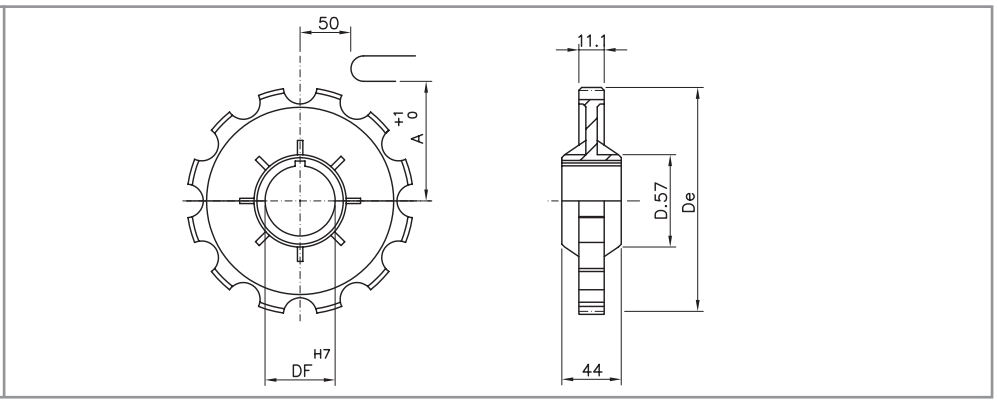

Standard sprockets
material: polyamide, brass HUB - UNI 6604-69 key seat

DIMENSIONS				PRODUCT CODE	
Z	De	Dp	A	DF 25	DF 30
08	136.3	106.8	53.0	S00M08 25	S00M08 30
10	165.1	161.8	69.0	S00M10 25	S00M10 30



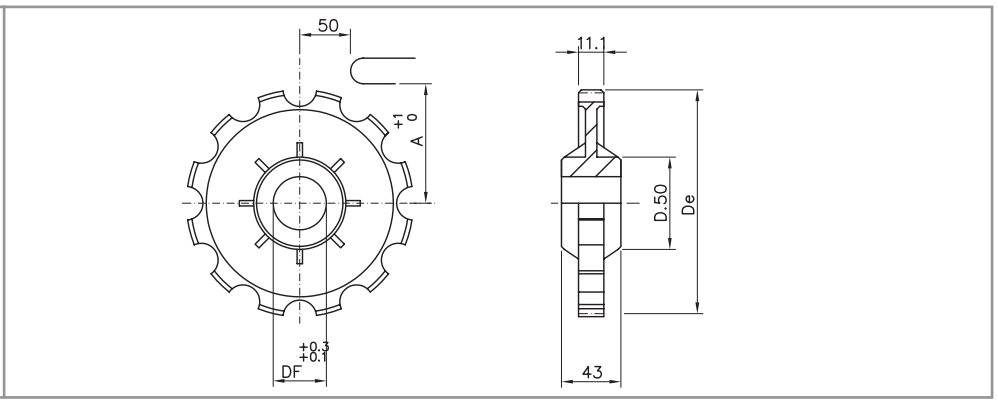

Standard idler wheels
material: polyamide

DIMENSIONS				PRODUCT CODE	
Z	De	Dp	A	DF 25	DF 30
08	136.3	106.8	53.0	R00M08 25	R00M08 30
10	165.1	161.8	69.0	R00M10 25	R00M10 30

machined sprockets and idler wheels

1500 / 1700 / 1701 / 1702 / 1703 SERIES

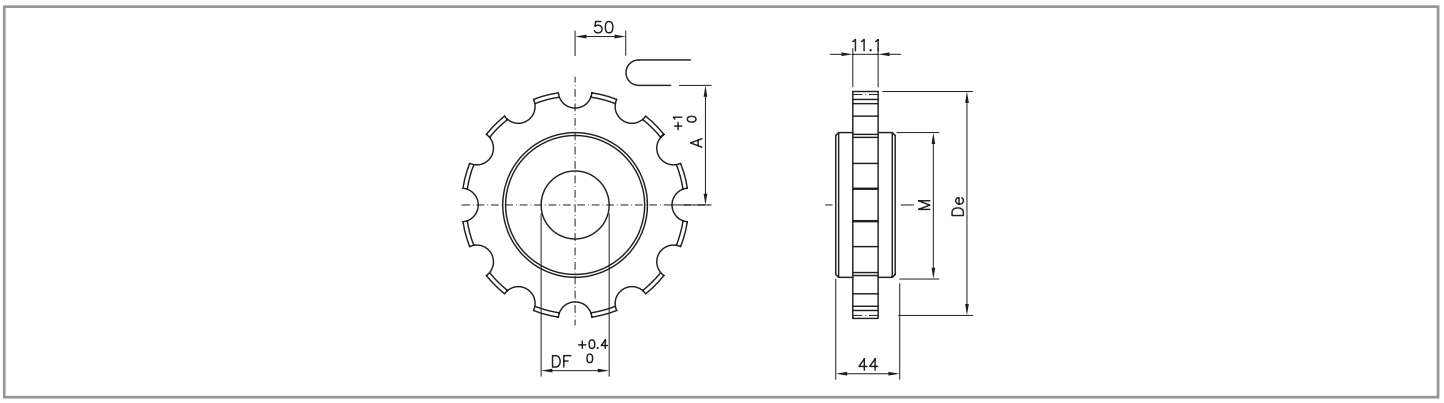

Standard sprockets
material: zinc plated steel (Z), stainless steel (X)

DIMENSIONS					PRODUCT CODE
Z	De	Dp	A	M	DF 20
10*	165.1	161.8	69.0	69.0	S01Z10 20
10*	165.1	161.8	60.0	69.0	S01X10 20
12*	196.1	193.19	69.0	69.0	S01Z12 20

* available upon request and minimum order quantity

machined sprockets and idler wheels

600 SERIES

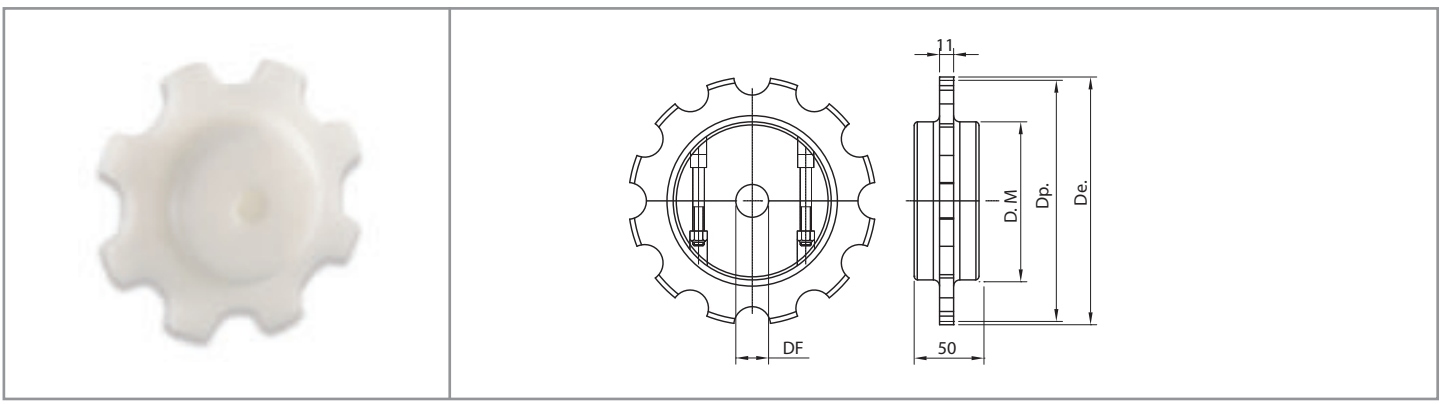

Split sprockets
material: polyamide - screw in stainless steel - UNI 6604-69 key seat

DIMENSIONS				PRODUCT CODE
Z	De	Dp	DM	DF 20*
08	177.7	165.9	96.0	S11C08 20
10	219.3	205.5	96.0	S11C10 20
12	256.0	246.0	96.0	S11C12 20
14	297.0	286.0	96.0	S11C14 20

* plain bore

machined sprockets and idler wheels

600 SERIES



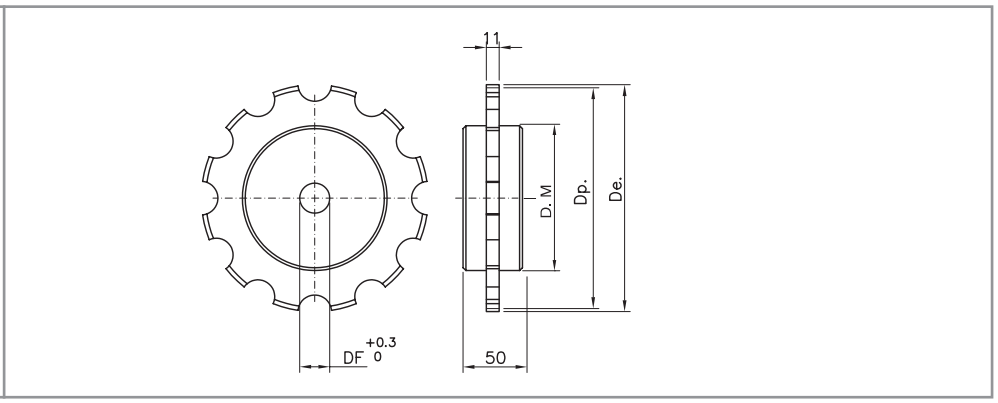

Standard sprockets and idler wheels
material: polyamide

DIMENSIONS				PRODUCT CODE
Z	De	Dp	DM	DF 20
06*	128.0	127.0	96.0	S01C06 20
08	177.7	165.9	96.0	S01C08 20
10	219.3	205.5	96.0	S01C10 20
12*	256.0	246.0	96.0	S01C12 20
14*	297.0	286.0	96.0	S01C14 20

* available upon request and minimum order quantity

machined sprockets and idler wheels

1400 SERIES



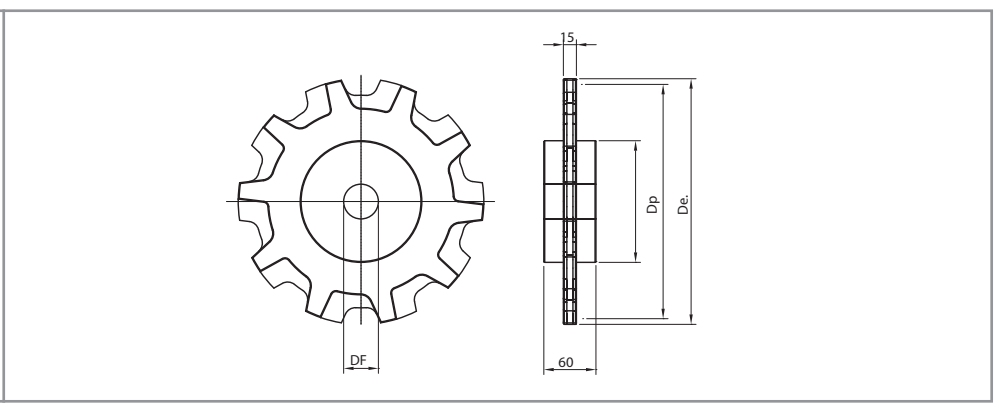

Standard sprockets and idler wheels
material: polyamide

DIMENSIONS				PRODUCT CODE
Z	De	Dp	DM	DF 19*
08	213	204	90	S01D08 19
10	276	267	140	S01D10 19

* plain bore

machined sprockets and idler wheels

720 / 720 PT SERIES



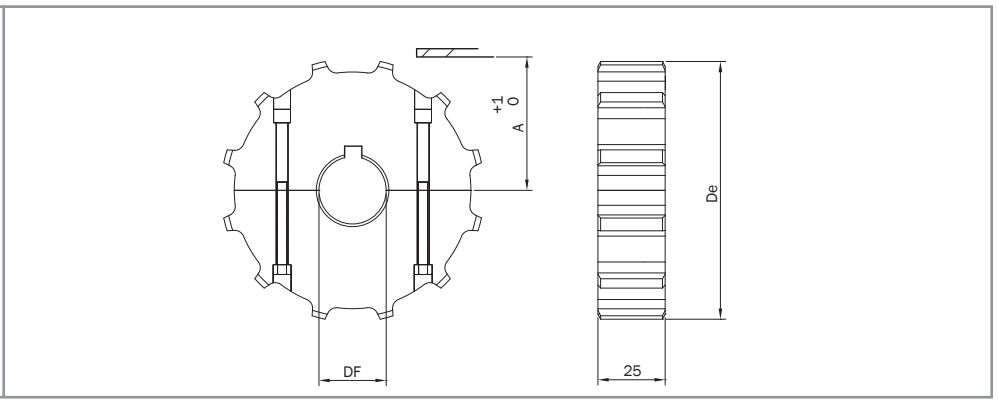

Split sprockets
material: polyamide PA white - screw in stainless steel UNI 6604-69 key seat

DIMENSIONS				PRODUCT CODE				
Z	De	Dp	A	DF 18*	DF 25	DF 30	DF 35	DF 40
12	98.00	98.14	44.7	S11E12 18	S11E12 25	S11E12 30	S11E12 35	S11E12 40
14	114.00	114.18	52.7	S11E14 18	S11E14 25	S11E14 30	S11E14 35	S11E14 40
16	130.00	130.20	60.7	S11E16 18	S11E16 25	S11E16 30	S11E16 35	S11E16 40
18	146.00	146.27	68.8	S11E18 18	S11E18 25	S11E18 30	S11E18 35	S11E18 40
20	162.00	162.37	76.8	S11E20 18	S11E20 25	S11E20 30	S11E20 35	S11E20 40

* plain bore



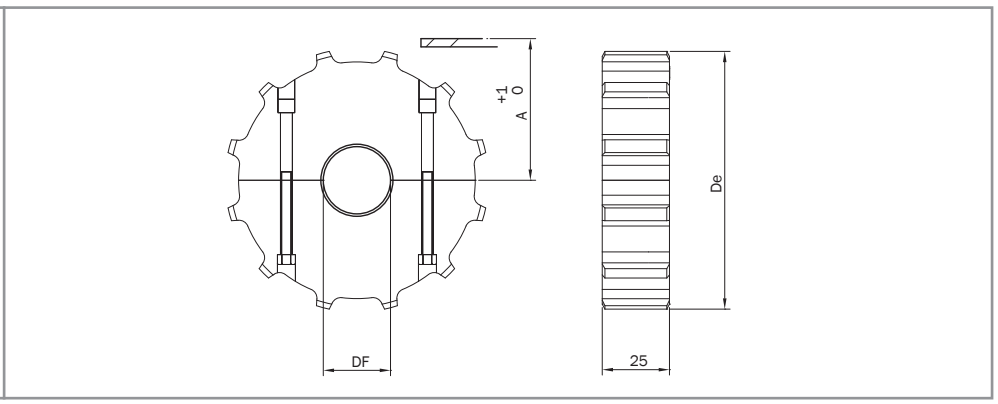

Split idler wheels
material: polyamide PA white - screw in stainless steel

DIMENSIONS				PRODUCT CODE				
Z	De	Dp	A	DF 18*	DF 25	DF 30	DF 35	DF 40
12	98.00	98.14	44.7	R11E12 18	R11E12 25	R11E12 30	R11E12 35	R11E12 40
14	114.00	114.18	52.7	R11E14 18	R11E14 25	R11E14 30	R11E14 35	R11E14 40
16	130.00	130.20	60.7	R11E16 18	R11E16 25	R11E16 30	R11E16 35	R11E16 40
18	146.00	146.27	68.8	R11E18 18	R11E18 25	R11E18 30	R11E18 35	R11E18 40
20	162.00	162.37	76.8	R11E20 18	R11E20 25	R11E20 30	R11E20 35	R11E20 40

* plain bore

injected sprockets and idler wheels

720 / 720 PT SERIES



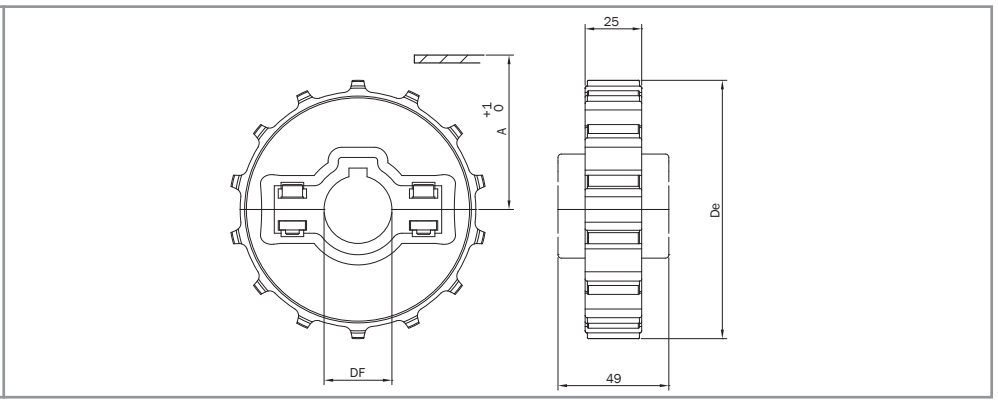

Split sprockets
material: reinforced polyamide - screw in stainless steel UNI 6604-69 key seat

DIMENSIONS				PRODUCT CODE			
Z	De	Dp	A	DF 30	DF 35	DF 40	DF 45
14	114.00	114.18	52.7	S10E14 30	S10E14 35	S10E14 40	/
16	130.00	130.20	60.7	S10E16 30	S10E16 35	S10E16 40	S10E16 45
18	146.00	146.30	68.8	S10E18 30	S10E18 35	S10E18 40	S10E18 45
20	162.00	162.40	76.8	S10E20 30	S10E20 35	S10E20 40	S10E20 45

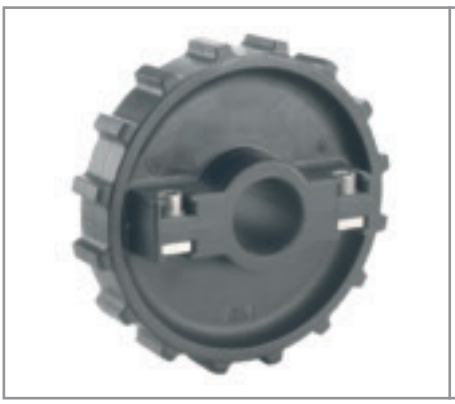

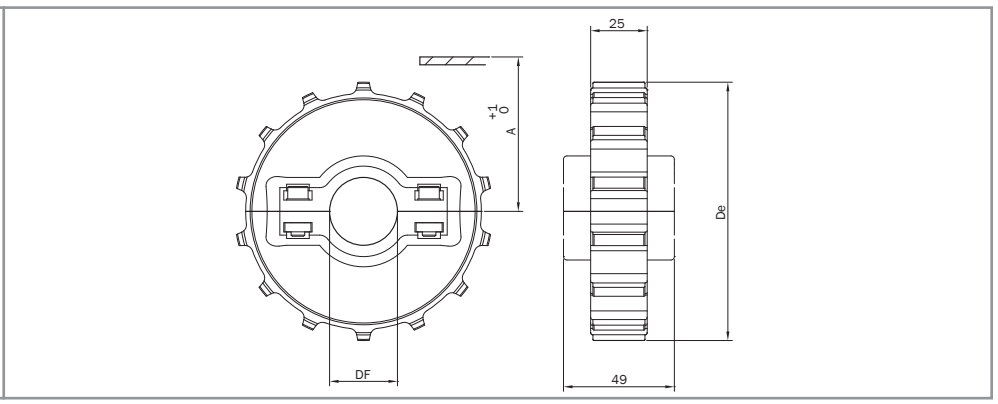

Split idler wheels
material: reinforced polyamide - screw in stainless steel

DIMENSIONS				PRODUCT CODE			
Z	De	Dp	A	DF 30	DF 35	DF 40	DF 45
14	114.00	114.18	52.7	R10E14 30	R10E14 35	R10E14 40	/
16	130.00	130.20	60.7	R10E16 30	R10E16 35	R10E16 40	R10E16 45
18	146.00	146.30	68.8	R10E18 30	R10E18 35	R10E18 40	R10E18 45
20	162.00	162.40	76.8	R10E20 30	R10E20 35	R10E20 40	R10E20 45

machined sprockets and idler wheels

730 / 730 PT SERIES



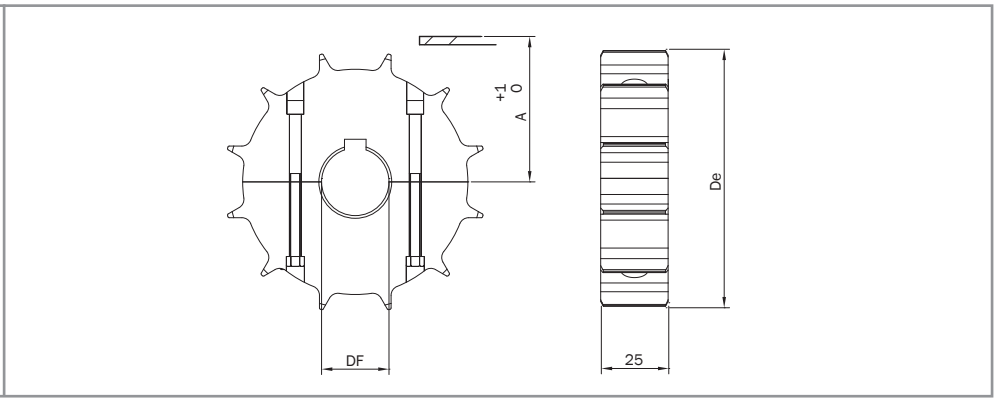

Split sprockets

material: polyamide PA white - screw in stainless steel UNI 6604-69 key seat

DIMENSIONS				PRODUCT CODE				
Z	De	Dp	A	DF 18*	DF 25	DF 30	DF 35	DF 40
12	97.90	98.14	42.7	S11H12 18	S11H12 25	S11H12 30	S11H12 35	S11H12 40
13	105.54	106.14	46.7	S11H13 18	S11H13 25	S11H13 30	S11H13 35	S11H13 40
14	114.00	114.18	50.7	S11H14 18	S11H14 25	S11H14 30	S11H14 35	S11H14 40
15	112.60	122.20	54.6	S11H15 18	S11H15 25	S11H15 30	S11H15 35	S11H15 40
16	130.00	130.20	58.7	S11H16 18	S11H16 25	S11H16 30	S11H16 35	S11H16 40
18	146.00	146.28	66.7	S11H18 18	S11H18 25	S11H18 30	S11H18 35	S11H18 40
20	162.00	162.37	74.8	S11H20 18	S11H20 25	S11H20 30	S11H20 35	S11H20 40
21	171.00	170.42	78.9	S11H21 18	S11H21 25	S11H21 30	S11H21 35	S11H21 40

* plain bore



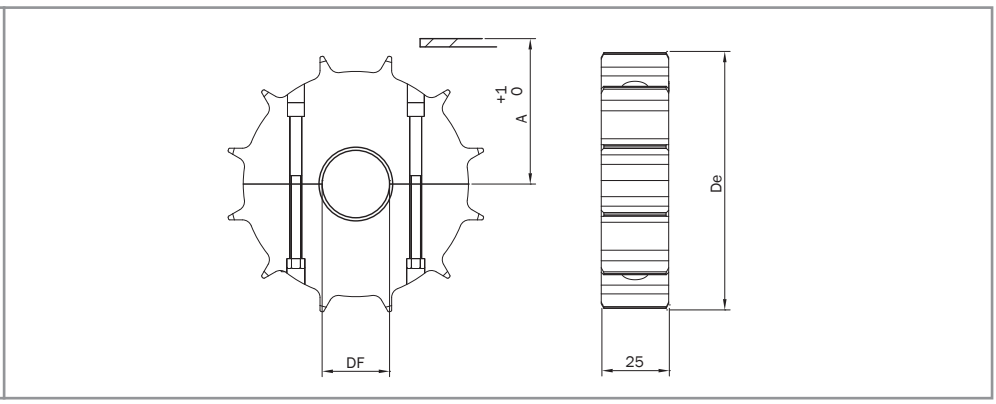

Split idler wheels

material: polyamide PA white - screw in stainless steel

DIMENSIONS				PRODUCT CODE				
Z	De	Dp	A	DF 18*	DF 25	DF 30	DF 35	DF 40
12	97.90	98.14	42.7	R11H12 18	R11H12 25	R11H12 30	R11H12 35	R11H12 40
13	105.54	106.14	46.7	R11H13 18	R11H13 25	R11H13 30	R11H13 35	R11H13 40
14	114.00	114.18	50.7	R11H14 18	R11H14 25	R11H14 30	R11H14 35	R11H14 40
15	112.60	122.20	54.6	R11H15 18	R11H15 25	R11H15 30	R11H15 35	R11H15 40
16	130.00	130.20	58.7	R11H16 18	R11H16 25	R11H16 30	R11H16 35	R11H16 40
18	146.00	146.28	66.7	R11H18 18	R11H18 25	R11H18 30	R11H18 35	R11H18 40
20	162.00	162.37	74.8	R11H20 18	R11H20 25	R11H20 30	R11H20 35	R11H20 40
21	171.00	170.42	78.9	R11H21 18	R11H21 25	R11H21 30	R11H21 35	R11H21 40

* plain bore

injected sprockets and idler wheels

730 / 730 PT SERIES



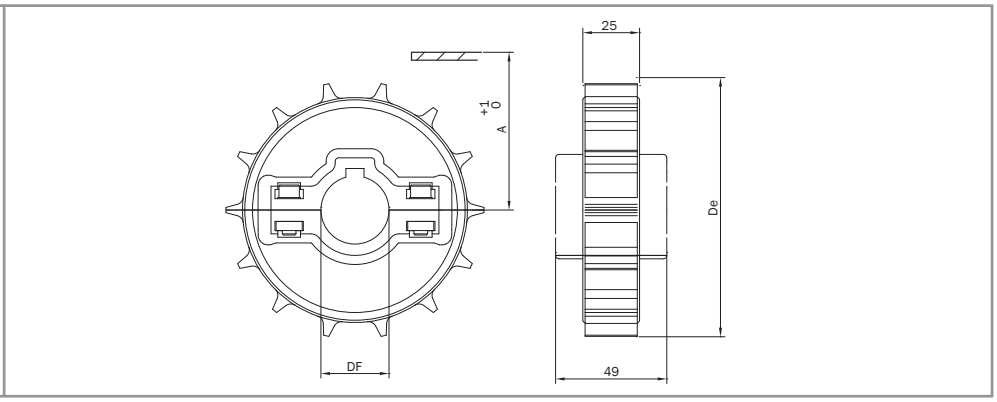

Split sprockets
material: reinforced polyamide - screw in stainless steel UNI 6604-69 key seat

DIMENSIONS				PRODUCT CODE			
Z	De	Dp	A	DF 30	DF 35	DF 40	DF 45
14	113.68	114.18	50.70	S10H14 30	S10H14 35	S10H14 40	/
16	130.00	130.20	58.70	S10H16 30	S10H16 35	S10H16 40	S10H16 45
18	144.00	146.30	66.70	S10H18 30	S10H18 35	S10H18 40	S10H18 45
20	162.00	162.40	74.80	S10H20 30	S10H20 35	S10H20 40	S10H20 45



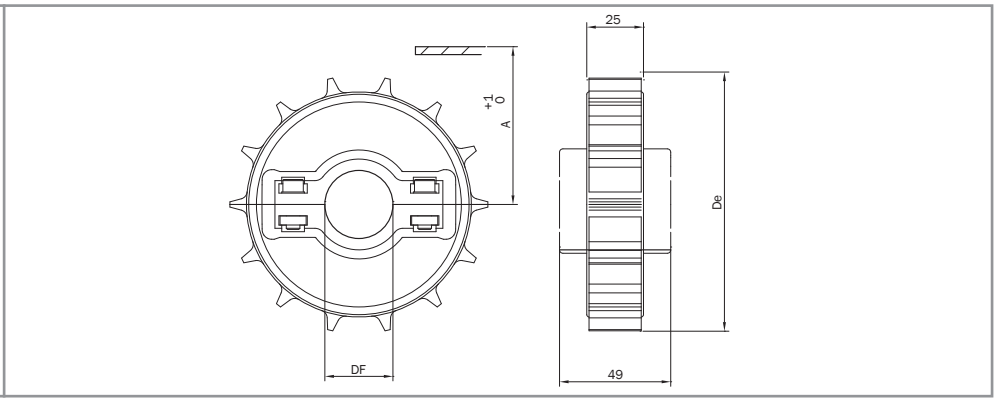

Split idler wheels
material: reinforced polyamide - screw in stainless steel

DIMENSIONS				PRODUCT CODE			
Z	De	Dp	A	DF 30	DF 35	DF 40	DF 45
14	113.68	114.18	50.70	R10H14 30	R10H14 35	R10H14 40	/
16	130.00	130.20	58.70	R10H16 30	R10H16 35	R10H16 40	R10H16 45
18	144.00	146.30	66.70	R10H18 30	R10H18 35	R10H18 40	R10H18 45
20	162.00	162.40	74.80	R10H20 30	R10H20 35	R10H20 40	R10H20 45

key seat tolerance and dimensions

UNI 6604-69 / ISO773 / DIN6885

Split sprockets

CHARACTERISTICS					
DF mm		b mm		t mm	
Dim	Tol	Dim	Tol	Dim	Tol
20	P9 -0.022 -0.074	6	P9 -0.012 -0.042	22,8	+ 0.1 0
25	P9 -0.022 -0.074	8	P9 -0.015 -0.051	28,3	+ 0.2 0
30	P9 -0.022 -0.074	8	P9 -0.015 -0.051	33,3	+ 0.2 0
35	P9 -0.026 -0.088	10	P9 -0.015 -0.051	38,3	+ 0.2 0
40	P9 -0.026 -0.088	12	P9 -0.018 -0.061	43,3	+ 0.2 0
45	P9 -0.026 -0.088	14	P9 -0.018 -0.061	48,8	+ 0.2 0
50	P9 -0.026 -0.088	14	P9 -0.018 -0.061	53,8	+ 0.2 0

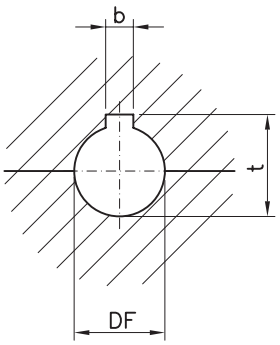

Standard sprockets

CHARACTERISTICS					
DF mm		b mm		t mm	
Dim	Tol	Dim	Tol	Dim	Tol
20	H7 +0.021 0	6	D10 -0.078 -0.030	22,8	+ 0.1 0
25	H7 +0.021 0	8	D10 -0.098 -0.040	28,3	+ 0.2 0
30	H7 +0.021 0	8	D10 -0.098 -0.040	33,3	+ 0.2 0
35	H7 +0.025 0	10	D10 -0.098 -0.040	38,3	+ 0.2 0
40	H7 +0.025 0	12	D10 -0.120 -0.050	43,3	+ 0.2 0
45	H7 +0.025 0	14	D10 -0.120 -0.050	48,8	+ 0.2 0
50	H7 +0.025 0	14	D10 -0.120 -0.050	53,8	+ 0.2 0

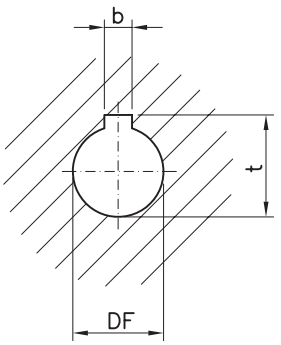

key seat tolerance and dimensions

UNI 6604-69 / ISO773 / DIN6885

Standard and split idler wheels

CHARACTERISTICS	
DF mm	
Dim	Tol
20	+ 0.4
	+ 0.2
25	+ 0.4
	+ 0.2
30	+ 0.4
	+ 0.2
35	+ 0.4
	+ 0.2
40	+ 0.4
	+ 0.2
45	+ 0.4
	+ 0.2
50	+ 0.4
	+ 0.2

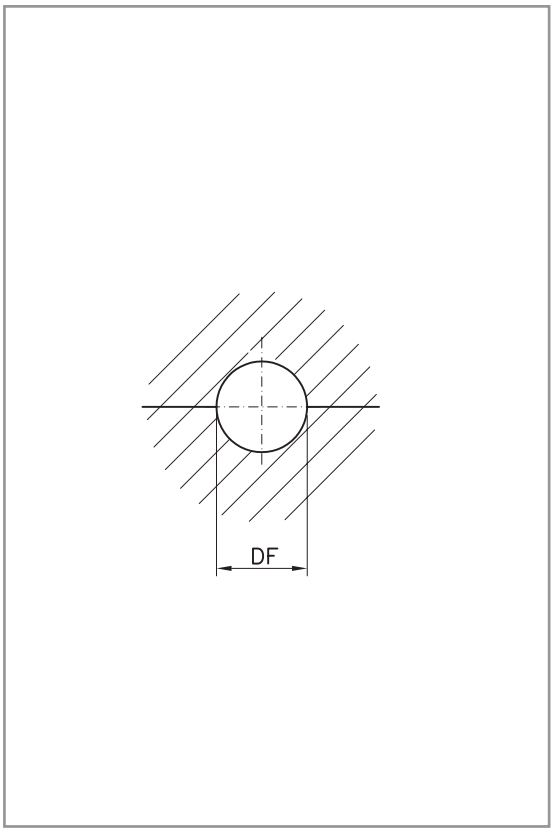

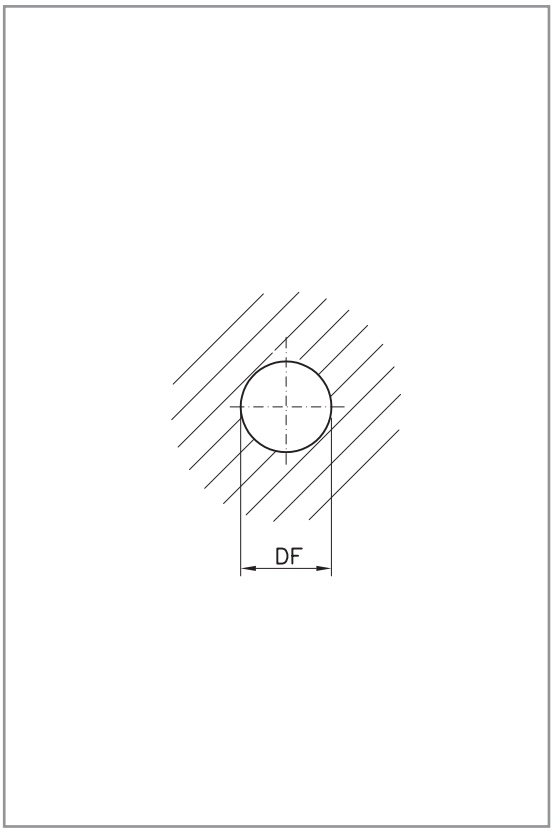

Every care has been taken to ensure the accuracy of the information contained in this catalogue
but no liability can be accepted for any errors or omissions.

Adeptrans Cadenas y Transmisiones S.L.

Special Sprockets

MakesMoving

916 926 286 · info@adeptrans.es

injected tangential sprockets

878BO / 879 BO / 880BO SERIES

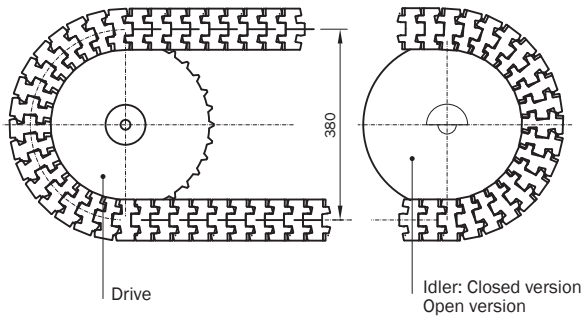

The use of tangential sprockets and turning disks enables the design of compact conveying systems with great numbers of curves.
It becomes easy to realise circuits either on the same level or staggered, inclined or downclined.

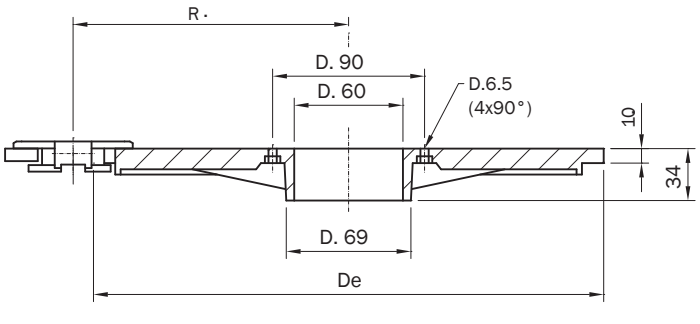

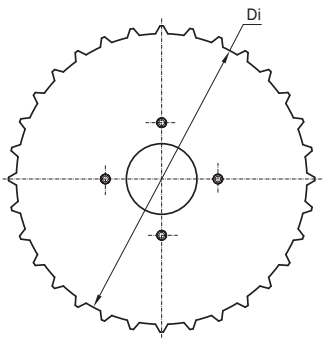

Tangential sprockets
material: polyamide / black

DIMENSIONS				PRODUCT CODE
Z	Di	De	R mm	
32	336.0	352.0	190.0	TS008 32
34	358.5	373.5	200.0	TS008 34

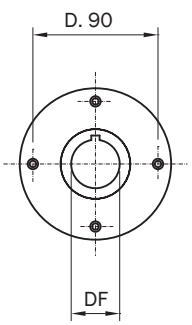

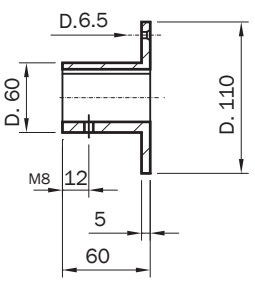

Hub for tangential sprockets
material: aluminium

PRODUCT CODE			
DF 18*	DF 25	DF 30	DF 40
TSHU 18	TSHU 25	TSHU 30	TSHU 40

* plain bore

Supply

1 Hub
4 Screw M6 in stainless steel
4 Nuts in stainless steel

injected tangential idler wheels

878BO / 879 BO / 880BO SERIES

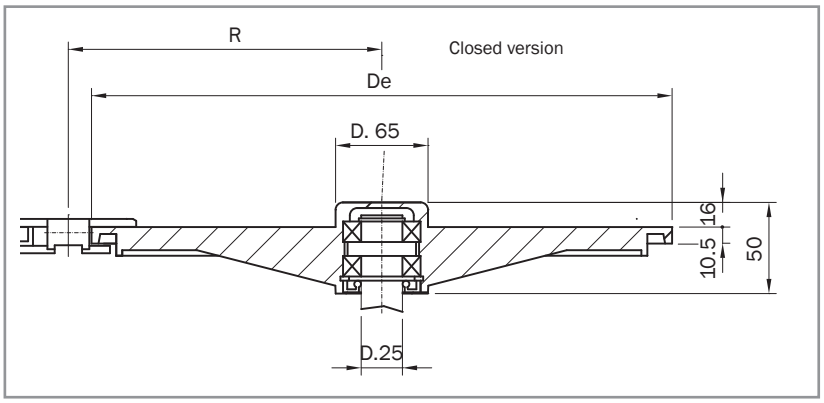

DIMENSIONS			PRODUCT CODE
Z eq	De	R min	
32	337	190	TDC008 32
34	357	200	TDC008 34

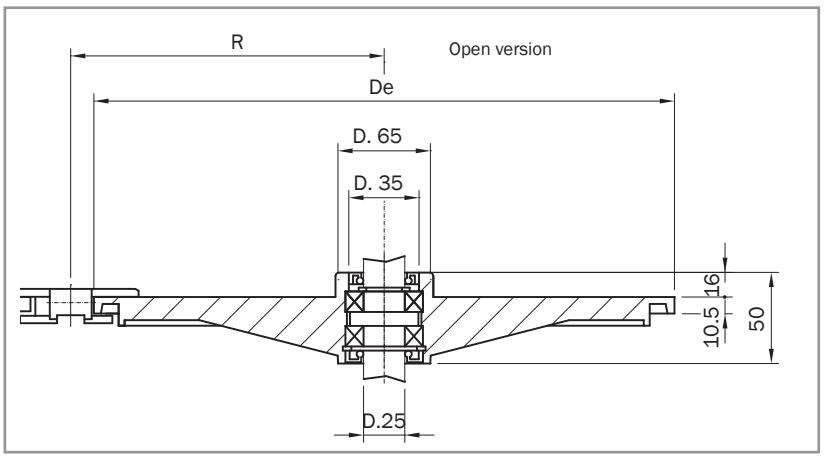

DIMENSIONS			PRODUCT CODE
Z eq	De	R min	
32	337	190	TDO008 32
34	357	200	TDO008 34

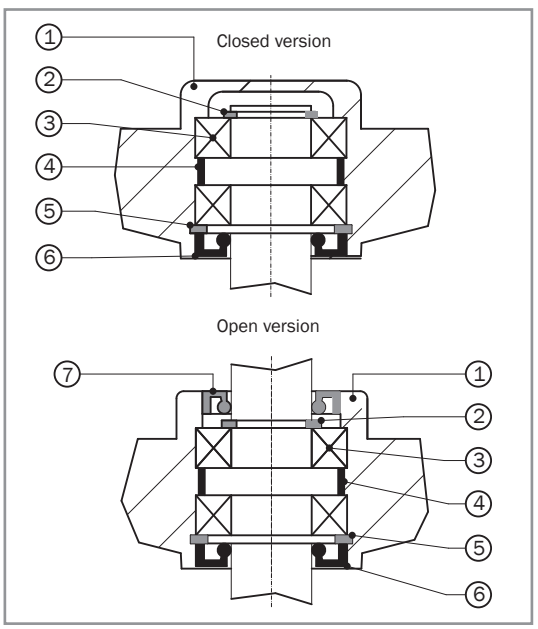

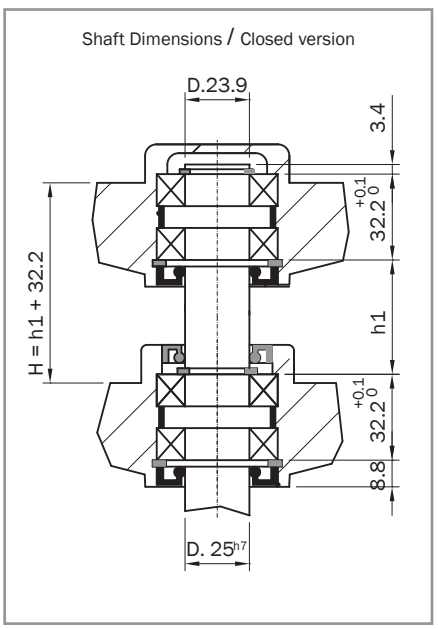

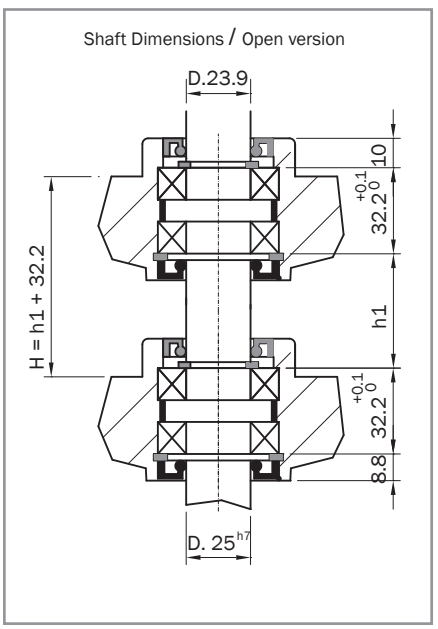

Supply

1. Turning disc polyamide material / black
2. External ring D.25 DIN 471
3. Single race radial bearing 6005-2RS (25x47x12)
4. Bearing space
5. Internal ring D.47 DIN 472
6. Seal ring NBR rubber 25x47x7 DIN 3760
7. Seal ring NBR rubber 25x35x7 DIN 3760

cast iron sprockets

812 / 815 SERIES

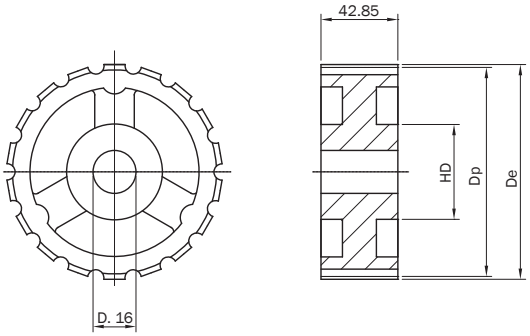

Standard sprockets
material: cast iron

DIMENSIONS					PRODUCT CODE
Z	De	Dp	HD	Weight kg	
19	117.10	117.35	50	4.0	8.22.020
21	130.05	129.26	63	5.2	8.22.030
23	142.00	141.22	63	5.5	8.22.040
25	154.20	153.21	63	7.0	8.22.050
27	166.60	165.20	71	7.4	8.22.060
29	179.05	177.24	71	8.0	8.22.070
31	191.25	189.28	71	8.3	8.22.080

820 / 831 SERIES

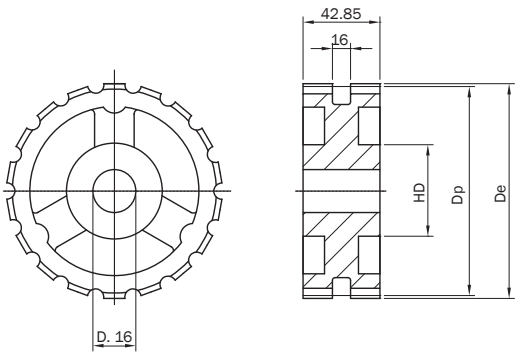

Standard sprockets
material: cast iron

DIMENSIONS					PRODUCT CODE
Z	De	Dp	HD	Weight kg	
19	117.10	117.35	50	2.27	8.22.520
21	130.05	129.26	63	2.70	8.22.530
23	142.00	141.22	63	3.30	8.22.540
25	154.20	153.21	63	3.80	8.22.550
27	166.60	165.20	71	4.45	8.22.560
29	179.05	177.24	71	4.75	8.22.570
31	191.25	189.28	71	5.90	8.22.580

cast iron sprockets

881 / 8811 SERIES

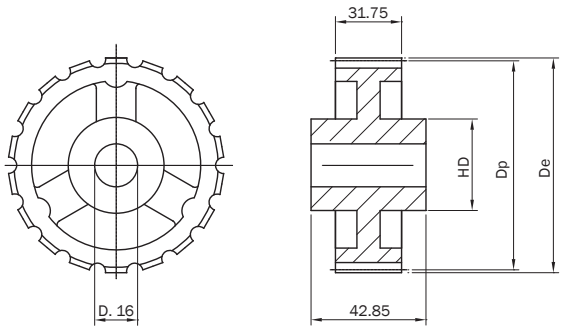

Standard sprockets
material: cast iron

DIMENSIONS					PRODUCT CODE
Z	De	Dp	HD	Weight kg	
19	117.10	117.35	50	2.10	8.22.120
21	130.05	129.26	63	2.30	8.22.130
23	142.00	141.22	63	2.50	8.22.140
25	154.20	153.21	63	2.80	8.22.150
27	166.60	165.20	71	3.00	8.22.160
29	179.05	177.24	71	3.20	8.22.170
31	191.25	189.28	71	3.30	8.22.180

802 / 804 / 821 SERIES

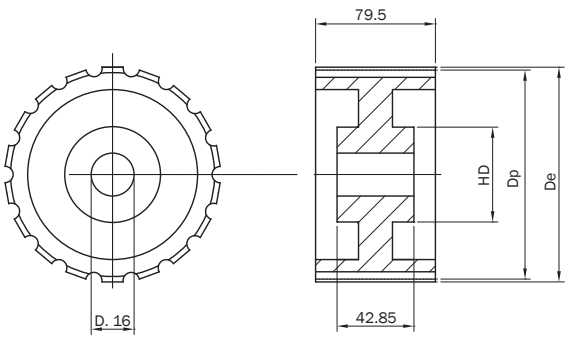

Standard sprockets
material: cast iron

DIMENSIONS					PRODUCT CODE
Z	De	Dp	HD	Weight kg	
19	117.10	117.35	54	3.00	8.22.320
21	130.05	129.26	63	4.00	8.22.330
23	142.00	141.22	63	4.50	8.22.340
25	154.20	153.21	63	5.20	8.22.350
27	166.60	165.20	71	12.40	8.22.360
29	179.05	177.24	71	14.40	8.22.370
31	191.25	189.28	71	19.90	8.22.380

cast iron sprockets

878 / 879 / 880 SERIES

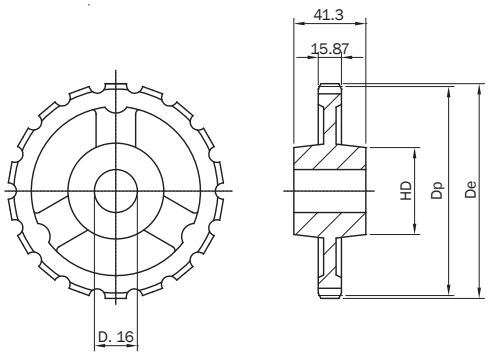

Standard sprockets
material: cast iron

DIMENSIONS					PRODUCT CODE
Z	De	Dp	HD	Weight kg	
9	109.93	111.40	63	1.60	8.22.209
10	122.48	123.29	63	1.90	8.22.210
11	134.97	135.23	63	2.20	8.22.211
12	147.42	147.21	63	2.50	8.22.220
15	184.48	183.86	63	2.70	8.22.230

882 SERIES

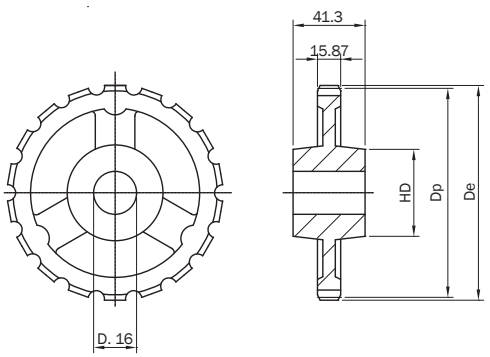

Standard sprockets
material: cast iron

DIMENSIONS					PRODUCT CODE
Z	De	Dp	HD	Weight kg	
9	112.40	111.40	63.5	1.70	8.22.410
10	124.00	123.29	63.5	2.00	8.22.420
11	136.50	135.25	63.5	2.30	8.22.430
12	148.00	147.21	63.5	2.60	8.22.440

cast iron sprockets

600 SERIES

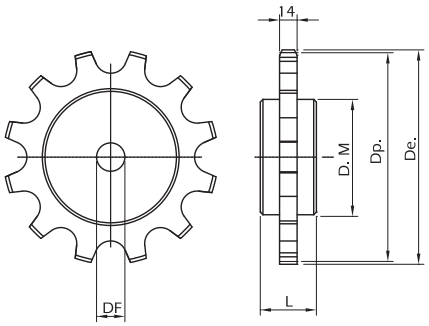

Standard sprockets
material: cast iron

DIMENSIONS					PRODUCT CODE
Z	De	Dp	M	L	DF 19**
08*	175.3	167.4	75.0	50.0	S01G08 19*
10*	216.0	207.3	100.0	50.0	S01G10 19*
12*	254.0	247.4	100.0	63.5	S01G12 19*
14*	294.6	287.8	100.0	63.5	S01G14 19*

* available upon request and minimum order quantity ** plain bore

cast iron sprockets

1500 / 1700 / 1701 / 1702 / 1703 SERIES

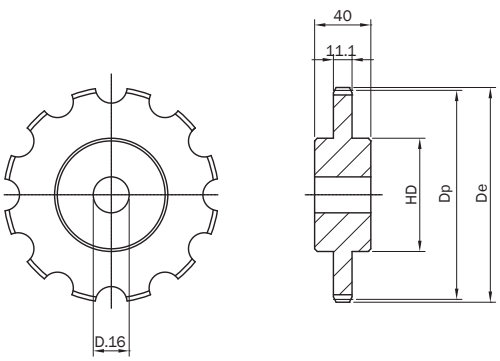

Standard sprockets
material: cast iron

DIMENSIONS					PRODUCT CODE
Z	De	Dp	HD	Weight kg	
10	165.00	161.80	65	1.80	8.22.610
12	196.00	193.10	65	2.35	8.22.612

standard sprockets

843 / 845 / 1843 SERIES

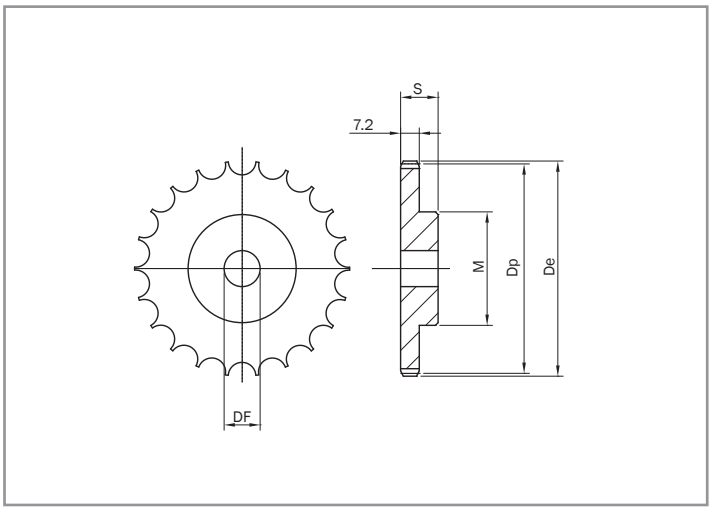

Standard sprockets
material: C45 steel

DIMENSIONS						PRODUCT CODE
Z	De	Dp	M	S	DF	
13	57.40	53.00	37	28	10	8.30.001
15	65.50	61.09	45	28	10	8.30.005
17	73.60	69.11	52	28	10	8.30.010
19	81.70	77.16	60	28	12	8.30.020
21	89.70	85.22	68	28	12	8.30.030
23	98.20	93.27	70	28	12	8.30.040
25	105.80	101.33	70	28	12	8.30.050
27	114.00	109.40	70	28	15	8.30.060
29	122.00	117.46	80	30	15	8.30.070
31	130.20	125.54	90	30	16	8.30.080
33	138.40	133.60	90	30	16	8.30.090

863 / 963 / 1863 / 1864 / 1873 / 1874

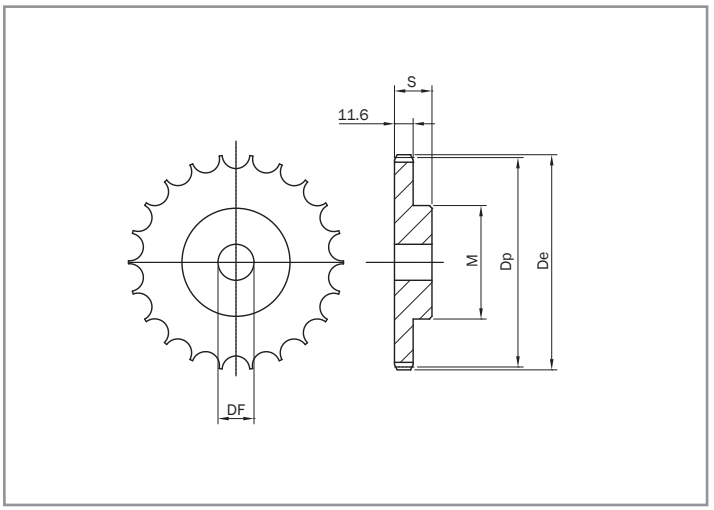

Standard sprockets
material: C45 steel

DIMENSIONS						PRODUCT CODE
Z	De	Dp	M	S	DF	
15	99.80	91.63	70	35	14	8.31.005
17	111.50	103.67	80	35	16	8.31.010
19	124.20	115.75	80	35	16	8.31.020
21	136.00	127.82	90	40	20	8.31.030
23	149.00	139.90	90	40	20	8.31.040
25	160.00	152.00	90	40	20	8.31.050
27	172.30	164.09	95	40	20	8.31.060
29	184.10	176.19	95	40	20	8.31.070
31	196.30	188.31	100	40	20	8.31.080

block body machined

STEEL SPROCKETS



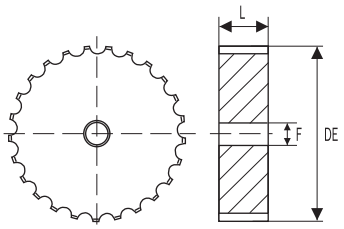

FOR STRAIGHT RUNNING CHAINS AND FOR NEW FLEX MAG / NEW FLEX MAG D / NEW FLEX MAG G CHAINS

The sprocket tooth pitch (mm 19,05) is half the pitch of the chain (38,1 mm). Therefore, when a sprocket with an odd number of teeth is used, the teeth engage the chain only every other revolution. This doubles the life of sprockets.

PRODUCT CODE	INTERNAL CODE	CHARACTERISTICS				
	Width (mm)	Number of teeth (z)	DE outside diameter (mm)	Pitch diameter (mm)	F plain bore diameter (mm)	Weight kg/m
8.12.005	43.50	15	92.90	93.70	20.0	1.86
8.12.010	43.50	17	104.70	105.47	20.0	2.34
8.12.020	43.50	19	117.10	117.35	20.0	3.05
8.12.030	43.50	21	130.05	129.25	20.0	3.80
8.12.040	43.50	23	142.00	141.20	20.0	4.60
8.12.050	43.50	25	154.20	153.20	20.0	5.40
8.12.060	43.50	27	166.60	165.20	20.0	6.40
8.12.070	43.50	29	179.05	177.25	20.0	7.50
8.12.080	43.50	31	191.25	189.30	20.0	8.70



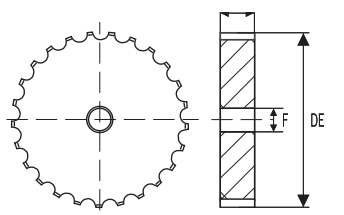

FOR MIGNON / FLEX RXMC / FLEX RXMS/FLEX RXM / FLEX RXM 316 / FLEX RXMA / FLEX FMC / FLEX FMS / FLEX FMD / FLEX FM / FLEX FMS2 / FLEX FM2 / FLEX FMA2 / FLEX RXMS G / SUPER G TAB CHAINS

The sprocket tooth pitch (mm 19,05) is half the pitch of the chain (38,1 mm). Therefore, when a sprocket with an odd number of teeth is used, the teeth engage the chain only every other revolution. This doubles the life of sprockets.

PRODUCT CODE	INTERNAL CODE	CHARACTERISTICS				
	Width (mm)	Number of teeth (z)	DE outside diameter (mm)	Pitch diameter (mm)	F plain bore diameter (mm)	Weight kg/m
8.12.120	31.0	19	117.10	117.35	20.0	2.20
8.12.130	31.0	21	130.05	129.25	20.0	2.70
8.12.140	31.0	23	142.00	141.20	20.0	3.30
8.12.150	31.0	25	154.20	153.20	20.0	3.90
8.12.160	31.0	27	166.60	165.20	20.0	4.60

Every care has been taken to ensure the accuracy of the information contained in this catalogue
but no liability can be accepted for any errors or omissions.

Adeptrans Cadenas y Transmisiones S.L.

Sideflexing and straight guides

MakesMoving

916 926 286 · info@adeptrans.es

sideflexing guides for TAB type chains

780 / 790 / 878 / 879 / 880 / 881 / 8811 SERIES

Sideflexing guides for chains - 82.5 K325 - 83.8 K330 P=85

TRACKS	A mm	R1= 500	R1= 610	R1= 650	R1= 800	R1=1000
1	100	CT182111	CT182121	CT182131	CT182141	CT182151
2	185	CT182211	CT182221	CT182231	CT182241	CT182251
3	270	CT182311	CT182321	CT182331	CT182341	CT182351
4	355	CT182411	CT182421	CT182431	CT182441	CT182451
5	440	CT182511	CT182521	CT182531	CT182541	CT182551
6	525	CT182611	CT182621	CT182631	CT182641	CT182651

Sideflexing guides for chains - 82.5 K325 - 83.8 K330 P=88

TRACKS	A mm	R1= 500	R1= 610	R1= 650	R1= 800	R1=1000
1	100	CT182111	CT182121	CT182131	CT182141	CT182151
2	188	CT182212	CT182222	CT182232	CT182242	CT182252
3	276	CT182312	CT182322	CT182332	CT182342	CT182352
4	364	CT182412	CT182422	CT182432	CT182442	CT182452
5	452	CT182512	CT182522	CT182532	CT182542	CT182552
6	540	CT182612	CT182622	CT182632	CT182642	CT182652

Sideflexing guides for chains - 82.5 K325 - 83.8 K330 P=90

TRACKS	A mm	R1= 500	R1= 610	R1= 650	R1= 800	R1=1000
1	100	CT182111	CT182121	CT182131	CT182141	CT182151
2	190	CT182213	CT182223	CT182233	CT182243	CT182253
3	280	CT182313	CT182323	CT182333	CT182343	CT182353
4	370	CT182413	CT182423	CT182433	CT182443	CT182453
5	460	CT182513	CT182523	CT182533	CT182543	CT182553
6	550	CT182613	CT182623	CT182633	CT182643	CT182653

Sideflexing guides for chain - 88.9 K350 P=90

TRACKS	A mm	R1= 500	R1= 610	R1= 650	R1= 800	R1=1000
1	100	CT188113	CT188123	CT188133	CT188143	CT188153
2	190	CT188213	CT188223	CT188233	CT188243	CT188253
3	280	CT188313	CT188323	CT188333	CT188343	CT188353
4	370	CT188413	CT188423	CT188433	CT188443	CT188453
5	460	CT188513	CT188523	CT188533	CT188543	CT188553
6	550	CT188613	CT188623	CT188633	CT188643	CT188653

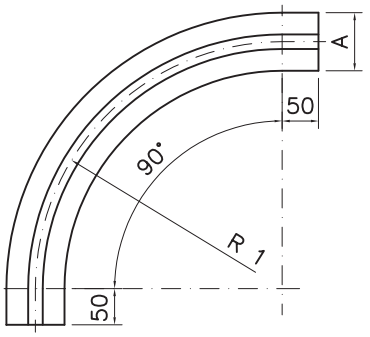

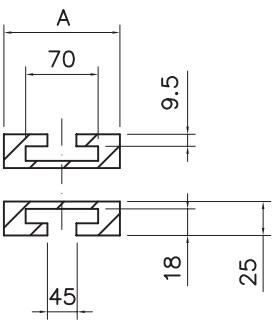

Sideflexing guides for chain - 114.3 K450 P=120

TRACKS	A mm	R1= 610	R1= 650	R1= 800	R1= 1000
1	130	CT111124	CT111134	CT111144	CT111154
2	250	CT111224	CT111234	CT111244	CT111254
3	370	CT111324	CT111334	CT111344	CT111354
4	490	CT111424	CT111434	CT111444	CT111454
5	610	CT111524	CT111534	CT111544	CT111554
6	730	CT111624	CT111634	CT111644	CT111654

Sideflexing guides for chain - 190.5 K750 P=195

TRACKS	A mm	R1= 610	R1= 650	R1= 800	R1=1000
1	200	CT119126	CT119136	CT119146	CT119156
2	395	CT119226	CT119236	CT119246	CT119256
3	590	CT119326	CT119336	CT119346	CT119356
4	785	CT119426	CT119436	CT119446	CT119456

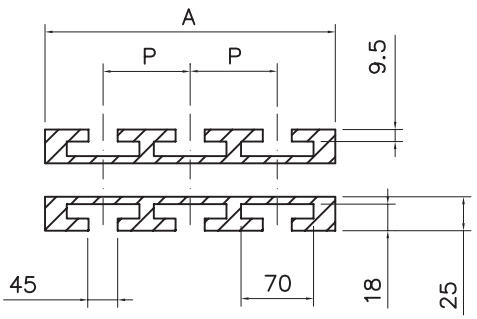

ALWAYS CHECK THE **A** DIMENSION

sideflexing guides for TAB type chains

780 / 790 / 878 / 879 / 880 / 881 / 8811 SERIES

Sideflexing guides for chains - 82.5 K325 - 83.8 K330 - Without the L section - P=90mm

TRACKS	A mm	B	h	L	R1= 500
1	100	70	9.5	-	DT182113
2	190	70	9.5	-	DT182213
3	280	70	9.5	-	DT182313
4	370	70	9.5	-	DT182413
5	460	70	9.5	-	DT182513
6	550	70	9.5	-	DT182613

Sideflexing guides for chains - 82.5 K325 - 83.8 K330 - With the L section - P on request

TRACKS	A mm	B	h	L	R1= 500
1	100	67	10.5	50	WT18211
2	A1	67	10.5	50	WT18221*
3	A1	67	10.5	50	WT18231*
4	A1	67	10.5	50	WT18241*
5	A1	67	10.5	50	WT18251*
6	A1	67	10.5	50	WT18261*

* specify pitch P

Sideflexing guides for chain - 114.3 K450 - Without the L section - P=120mm

TRACKS	A mm	B	h	L	R1= 610
1	125	70	9.5	-	DT111124
2	245	70	9.5	-	DT111224
3	365	70	9.5	-	DT111324
4	485	70	9.5	-	DT111424
5	605	70	9.5	-	DT111524
6	725	70	9.5	-	DT111624

Sideflexing guides for chain - 114.3 K450 - With the L section - pitch P on request

TRACKS	A mm	B	h	L	R1= 610
1	130	67	10.5	50	WT11112
2	A1	67	10.5	50	WT11122*
3	A1	67	10.5	50	WT11132*
4	A1	67	10.5	50	WT11142*
5	A1	67	10.5	50	WT11152*
6	A1	67	10.5	50	WT11162*

* specify pitch P

Sideflexing guides for chain - 190.5 K750 - Without the L section - P=195mm

TRACKS	A mm	B	h	L	R1= 610
1	200	70	9.5	-	DT119126
2	395	70	9.5	-	DT119226
3	590	70	9.5	-	DT119326
4	785	70	9.5	-	DT119426

Sideflexing guides for chain - 190.5 K750 - With the L section - pitch P on request

TRACKS	A mm	B	h	L	R1=610
1	210	67	10.5	50	WT11912
2	A1	67	10.5	50	WT11922*
3	A1	67	10.5	50	WT11932*
4	A1	67	10.5	50	WT11942*

* specify pitch P

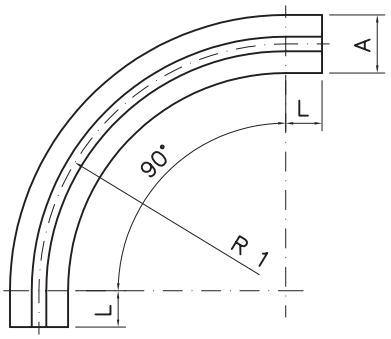

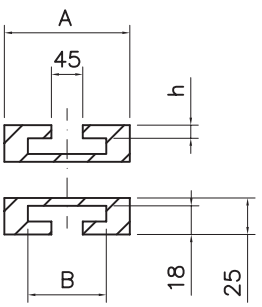

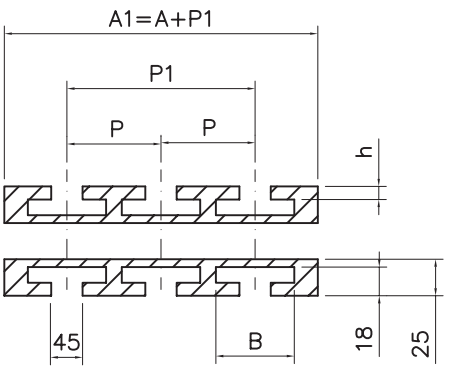

ALWAYS CHECK THE **A** DIMENSION

sideflexing guides for BEVEL 8° type chains

879 / 880 / 881 / 8811 SERIES

Sideflexing guides for chain - 82.5 K325 P=85

TRACKS	A mm	R1= 500	R1= 610	R1= 650	R1= 800	R1=1000
1	100	CB182111	CB182121	CB182131	CB182141	CB182151
2	185	CB182211	CB182221	CB182231	CB182241	CB182251
3	270	CB182311	CB182321	CB182331	CB182341	CB182351
4	355	CB182411	CB182421	CB182431	CB182441	CB182451
5	440	CB182511	CB182521	CB182531	CB182541	CB182551
6	525	CB182611	CB182621	CB182631	CB182641	CB182651

Sideflexing guides for chain - 82.5 K325 P=88

TRACKS	A mm	R1= 500	R1= 610	R1= 650	R1= 800	R1=1000
1	100	CB182111	CB182121	CB182131	CB182141	CB182151
2	188	CB182212	CB182222	CB182232	CB182242	CB182252
3	276	CB182312	CB182322	CB182332	CB182342	CB182352
4	364	CB182412	CB182422	CB182432	CB182442	CB182452
5	452	CB182512	CB182522	CB182532	CB182542	CB182552
6	540	CB182612	CB182622	CB182632	CB182642	CB182652

Sideflexing guides for chain - 82.5 K325 P=90

TRACKS	A mm	R1= 500	R1= 610	R1= 650	R1= 800	R1=1000
1	100	CB182111	CB182121	CB182131	CB182141	CB182151
2	190	CB182213	CB182223	CB182233	CB182243	CB182253
3	280	CB182313	CB182323	CB182333	CB182343	CB182353
4	370	CB182413	CB182423	CB182433	CB182443	CB182453
5	460	CB182513	CB182523	CB182533	CB182543	CB182553
6	550	CB182613	CB182623	CB182633	CB182643	CB182653

Sideflexing guides for chain - 88.9 K350 P=90

TRACKS	A mm	R1= 500	R1= 610	R1= 650	R1= 800	R1=1000
1	100	CB188113	CB188123	CB188133	CB188143	CB188153
2	190	CB188213	CB188223	CB188233	CB188243	CB188253
3	280	CB188313	CB188323	CB188333	CB188343	CB188353
4	370	CB188413	CB188423	CB188433	CB188443	CB188453
5	460	CB188513	CB188523	CB188533	CB188543	CB188553
6	550	CB188613	CB188623	CB188633	CB188643	CB188653

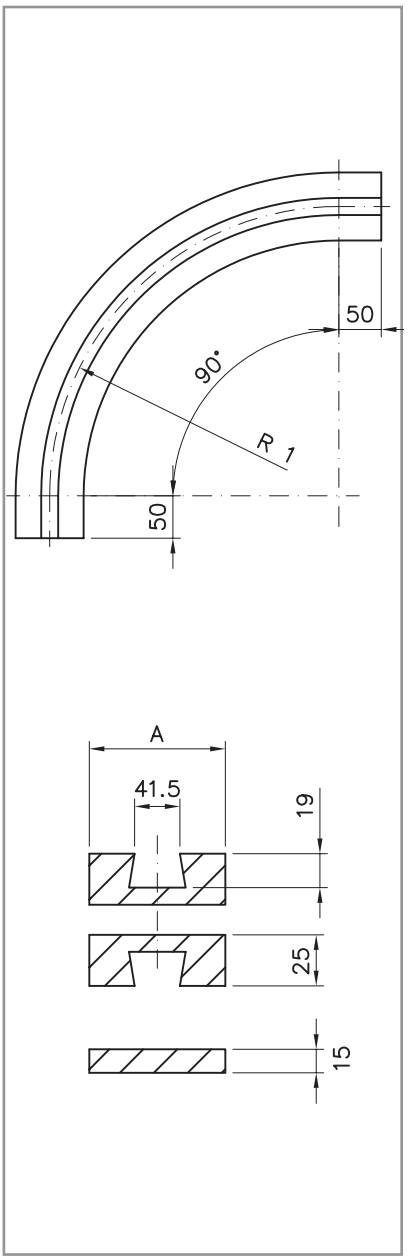

Sideflexing guides for chain - 114.3 K450 P=120

TRACKS	A mm	R1= 610	R1= 650	R1= 800	R1= 1000
1	130	CB111124	CB111134	CB111144	CB111154
2	250	CB111224	CB111234	CB111244	CB111254
3	370	CB111324	CB111334	CB111344	CB111354
4	490	CB111424	CB111434	CB111444	CB111454
5	610	CB111524	CB111534	CB111544	CB111554
6	730	CB111624	CB111634	CB111644	CB111654

Sideflexing guides for chain - 190.5 K750 P=195

TRACKS	A mm	R1= 610	R1= 650	R1= 800	R1=1000
1	200	CB119126	CB119136	CB119146	CB119156
2	395	CB119226	CB119236	CB119246	CB119256
3	590	CB119326	CB119336	CB119346	CB119356
4	785	CB119426	CB119436	CB119446	CB119456

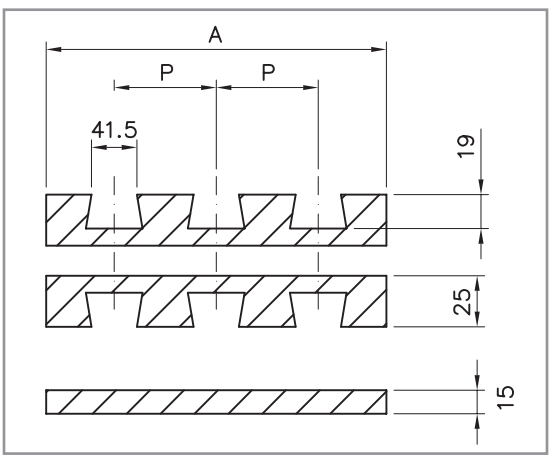

ALWAYS CHECK THE **A** DIMENSION

sideflexing guides for BEVEL 8° type chains

879 / 880 / 881 / 8811 SERIES

Sideflexing guides for chain - 82.5 K325 - Without the L section - P=90mm

TRACKS	A mm	h	h1	L	R1= 500
1	100	18	16	-	DB182113
2	190	18	16	-	DB182213
3	280	18	16	-	DB182313
4	370	18	16	-	DB182413
5	460	18	16	-	DB182513
6	550	18	16	-	DB182613

Sideflexing guides for chain - 82.5 K325 - With the L section - pitch P on request

TRACKS	A mm	h	h1	L	R1= 500
1	100	17	15	50	WB18211
2	A1	17	15	50	WB18221*
3	A1	17	15	50	WB18231*
4	A1	17	15	50	WB18241*
5	A1	17	15	50	WB18251*
6	A1	17	15	50	WB18261*

* specify pitch P

Sideflexing guides for chain - 114.3 K450 - Without the L section - P=120mm

TRACKS	A mm	h	h1	L	R1= 610
1	125	18	16	-	DB111124
2	245	18	16	-	DB111224
3	365	18	16	-	DB111324
4	485	18	16	-	DB111424
5	605	18	16	-	DB111524
6	725	18	16	-	DB111624

Sideflexing guides for chain - 114.3 K450 - With the L section - pitch P on request

TRACKS	A mm	h	h1	L	R1= 610
1	130	17	15	50	WB11112
2	A1	17	15	50	WB11122*
3	A1	17	15	50	WB11132*
4	A1	17	15	50	WB11142*
5	A1	17	15	50	WB11152*
6	A1	17	15	50	WB11162*

* specify pitch P

Sideflexing guides for chain - 190.5 K750 - Without the L section - P=195mm

TRACKS	A mm	h	h1	L	R1= 610
1	200	18	16	-	DB119126
2	395	18	16	-	DB119226
3	590	18	16	-	DB119326
4	785	18	16	-	DB119426

Sideflexing guides for chain - 190.5 K750 - With the L section - pitch P on request

TRACKS	A mm	h	h1	L	R1=610
1	210	17	15	50	WB11912
2	A1	17	15	50	WB11922*
3	A1	17	15	50	WB11932*
4	A1	17	15	50	WB11942*

* specify pitch P

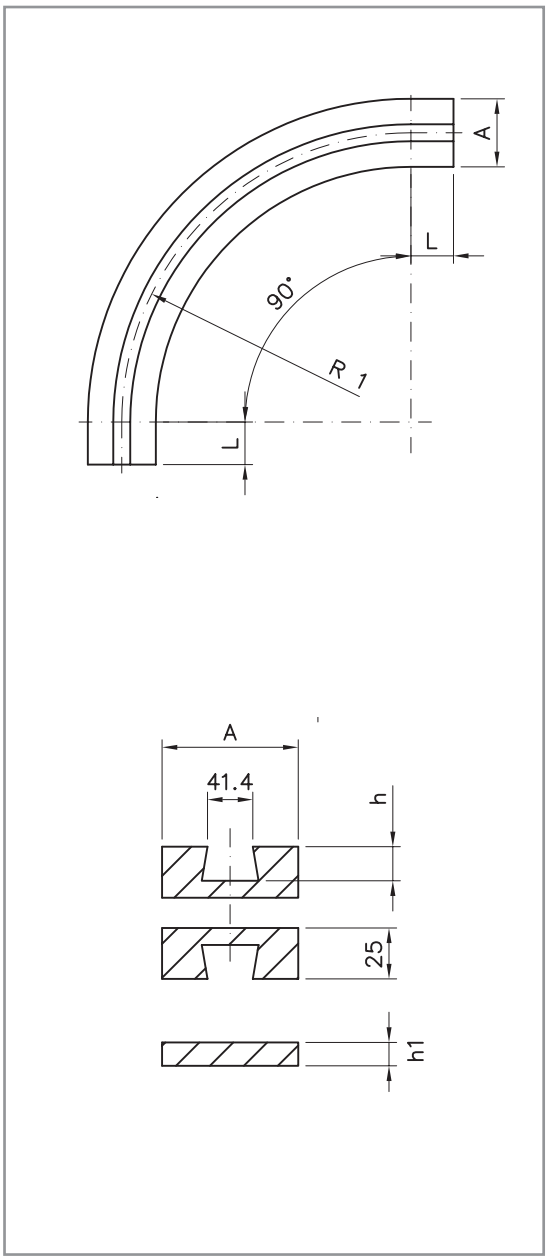

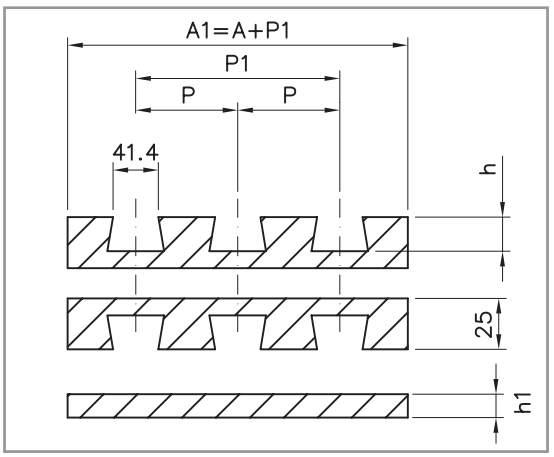

ALWAYS CHECK THE **A** DIMENSION

sideflexing guides for TAB type chains

882 TAB / LBP 882 TAB SERIES

Sideflexing guides for chain - 114.3 K450 P=120

TRACKS	A mm	R1= 610	R1= 650	R1=800	R1=1000
1	130	CT211124	CT211134	CT211144	CT211154
2	250	CT211224	CT211234	CT211244	CT211254
3	370	CT211324	CT211334	CT211344	CT211354
4	490	CT211424	CT211434	CT211444	CT211454
5	610	CT211524	CT211534	CT211544	CT211554
6	730	CT211624	CT211634	CT211644	CT211654

Sideflexing guides for chain - 190.5 K750 P=195

TRACKS	A mm	R1= 610	R1= 650	R1=800	R1=1000
1	200	CT219126	CT219136	CT219146	CT219156
2	395	CT219226	CT219236	CT219246	CT219256
3	590	CT219326	CT219336	CT219346	CT219356
4	785	CT219426	CT219436	CT219446	CT219456

Sideflexing guides for chain - 254.0 K1000 P=260

TRACKS	A mm	R1= 610	R1= 650	R1=800	R1=1000
1	270	CT225127	CT225137	CT225147	CT225157
2	530	CT225227	CT225237	CT225247	CT225257
3	790	CT225327	CT225337	CT225347	CT225357
4	1050	CT225427	CT225437	CT225447	CT225457

Sideflexing guides for chain - 304.8 K1200 P=310

TRACKS	A mm	R1= 610	R1= 650	R1=800	R1=1000
1	320	CT230128	CT230138	CT230148	CT230158
2	630	CT230228	CT230238	CT230248	CT230258
3	940	CT230328	CT230338	CT230348	CT230358
4	1250	CT230428	CT230438	CT230448	CT230458

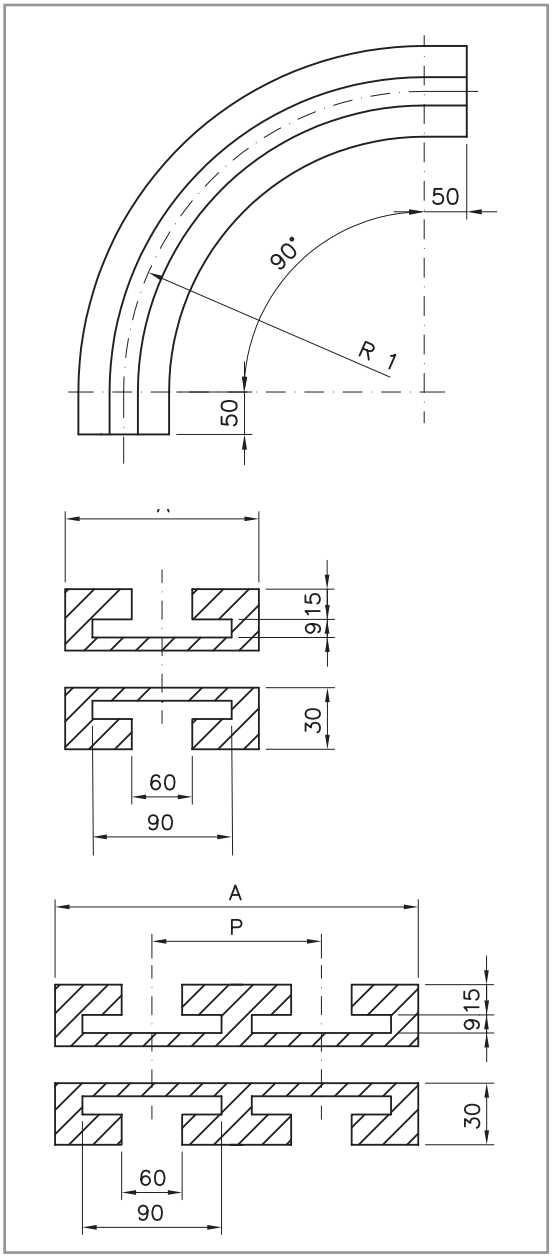

ALWAYS CHECK THE **A** DIMENSION

sideflexing guides for chains

882 TAB / 882 BEVEL SERIES

Sideflexing guides for chain
BEVEL 8° 114.3 K450 P=120

TRACKS	A mm	R1= 610
1	125	DB211124
2	245	DB211224
3	365	DB211324
4	485	DB211424

Sideflexing guides for chain
TAB 114.3 K450

TRACKS	A mm	R1= 610
1	130	DT21112
2	A1	DT21122*
3	A1	DT21132*
4	A1	DT21142*

* specify pitch P

Sideflexing guides for chain
BEVEL 8° 190.5 K750 P=195

TRACKS	A mm	R1= 610
1	200	DB219126
2	395	DB219226
3	590	DB219326
4	785	DB219426

Sideflexing guides for chain
TAB 190.5 K750

TRACKS	A mm	R1= 610
1	130	DT21912
2	A1	DT21922*
3	A1	DT21932*
4	A1	DT21942*

* specify pitch P

Sideflexing guides for chain
BEVEL 8° 254.0 K1000 P=260

TRACKS	A mm	R1= 610
1	265	DB225127
2	525	DB225227
3	785	DB225327

Sideflexing guides for chain
TAB 254.0 K1000

TRACKS	A mm	R1= 610
1	270	DT22512
2	A1	DT22522*
3	A1	DT22532*
4	A1	DT22542*

* specify pitch P

Sideflexing guides for chain
TAB 304.8 K1200

TRACKS	A mm	R1= 610
1	320	DT23012
2	A1	DT23022*
3	A1	DT23032*
4	A1	DT23042*

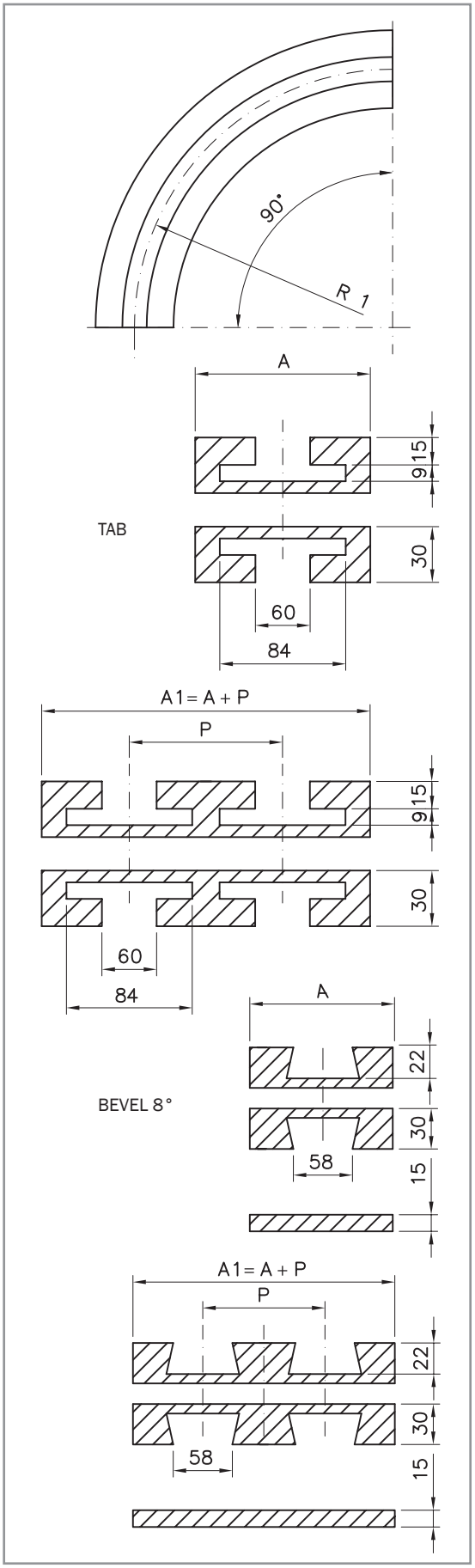

ALWAYS CHECK THE **A** DIMENSION

sideflexing guides for BEVEL 8° type chains

882 SERIES

Sideflexing guides for chain - 114.3 K450 P=120

TRACKS	A mm	R1= 610	R1= 650	R1=800	R1=1000
1	125	CB211124	CB211134	CB211144	CB211154
2	245	CB211224	CB211234	CB211244	CB211254
3	365	CB211324	CB211334	CB211344	CB211354
4	485	CB211424	CB211434	CB211444	CB211454

Sideflexing guides for chain - 190.5 K750 P=195

TRACKS	A mm	R1= 610	R1= 650	R1=800	R1=1000
1	200	CB219126	CB219136	CB219146	CB219156
2	395	CB219226	CB219236	CB219246	CB219256
3	590	CB219326	CB219336	CB219346	CB219356
4	785	CB219426	CB219436	CB219446	CB219456

Sideflexing guides for chain - 254.0 K1000 P=260

TRACKS	A mm	R1= 610	R1= 650	R1=800	R1=1000
1	265	CB225127	CB225137	CB225147	CB225157
2	525	CB225227	CB225237	CB225247	CB225257
3	785	CB225327	CB225337	CB225347	CB225357

Sideflexing guides for chain - 304.8 K1200 P=310

TRACKS	A mm	R1= 610	R1= 650	R1=800	R1=1000
1	320	CT230128	CT230138	CT230148	CT230158
2	630	CT230228	CT230238	CT230248	CT230258
3	940	CT230328	CT230338	CT230348	CT230358

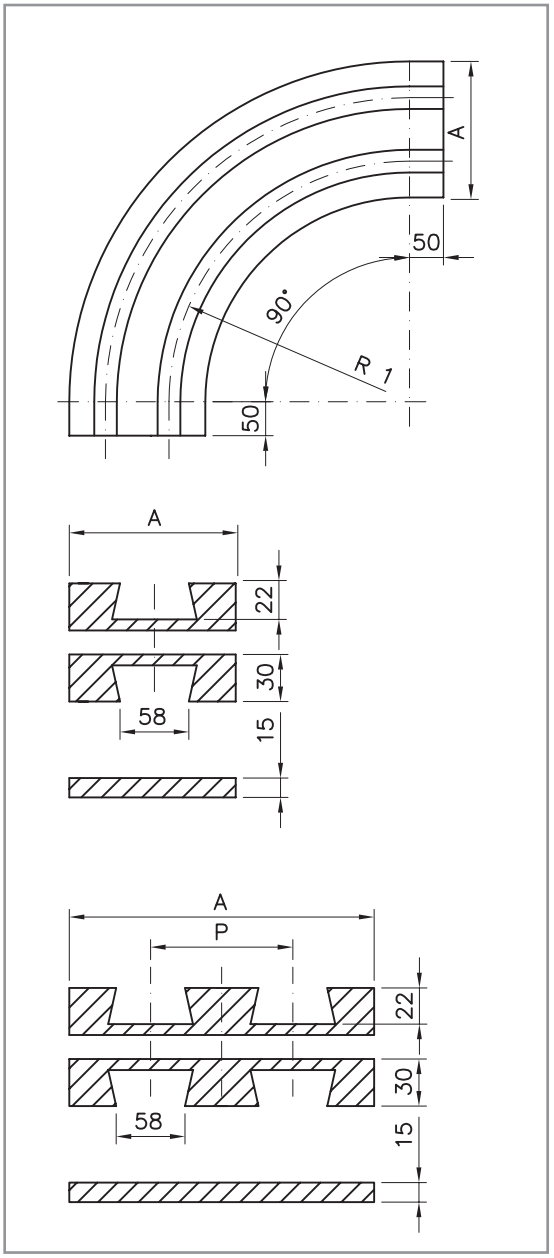

ALWAYS CHECK THE **A** DIMENSION

sideflexing guides for TAB type chains

1863 / 1873 / 1874 SERIES

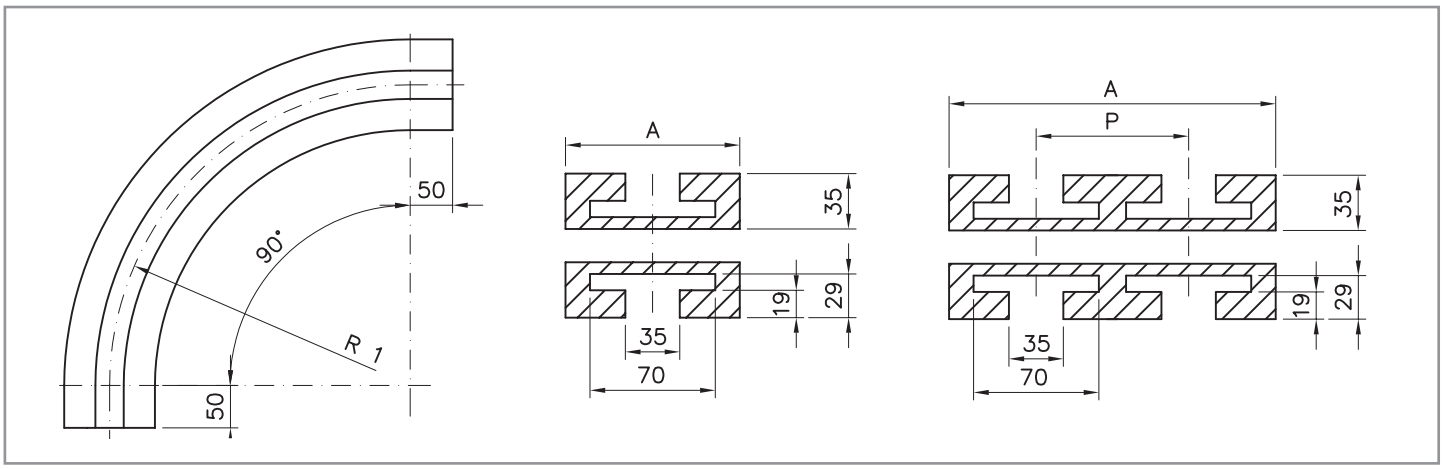

Sideflexing guides for chain - 57.1 K225 P=70

TRACKS	A mm	R1= 380	R1= 500	R1= 610	R1= 800	R1= 1000
1	75	CT45710	CT45711	CT45712	CT45714	CT45715
2	145	CT457209	CT457219	CT457229	CT457249	CT457259
3	215	CT457309	CT457319	CT457329	CT457349	CT457359
4	285	CT457409	CT457419	CT457429	CT457449	CT457459

Sideflexing guides for chain - 82.5 K325 P=85

TRACKS	A mm	R1= 380	R1= 500	R1= 610	R1= 650	R1= 800	R1= 1000
1	100	CT48210	CT48211	CT48212	CT48213	CT48214	CT48215
2	185	CT482201	CT482211	CT482221	CT482231	CT482241	CT482251
3	270	CT482301	CT482311	CT482321	CT482331	CT482341	CT482351
4	355	CT482401	CT482411	CT482421	CT482431	CT482441	CT482451

Sideflexing guides for chain - 82.5 K325 P=88

TRACKS	A mm	R1= 500	R1= 610	R1= 650	R1= 800	R1= 1000
1	100	CT48211	CT48212	CT48213	CT48214	CT48215
2	190	CT482212	CT482222	CT482232	CT482242	CT482252
3	280	CT482312	CT482322	CT482332	CT482342	CT482352
4	370	CT482412	CT482422	CT482432	CT482442	CT482452

Sideflexing guides for chain - 82.5 K325 P=90

TRACKS	A mm	R1= 500	R1= 610	R1= 650	R1= 800	R1= 1000
1	100	CT48211	CT48212	CT48213	CT48214	CT48215
2	190	CT482213	CT482223	CT482233	CT482243	CT482253
3	280	CT482313	CT482323	CT482333	CT482343	CT482353
4	370	CT482413	CT482423	CT482433	CT482443	CT482453

Sideflexing guides for chain - 114.3 K450 P=120

TRACKS	A mm	R1= 380	R1= 500	R1= 610	R1= 650	R1= 800	R1= 1000
1	130	CT411104	CT411114	CT411124	CT411134	CT411144	CT411154
2	250	CT411204	CT411214	CT411224	CT411234	CT411244	CT411254
3	370	CT411304	CT411314	CT411324	CT411334	CT411344	CT411354
4	490	CT411404	CT411414	CT411424	CT411434	CT411444	CT411454

sideflexing guides for TAB type chains

1863 / 1873 / 1874 SERIES

Sideflexing guides for chain
152.4 K600 P=160

TRACKS	A mm	R1= 500	R1= 610	R1= 650	R1= 800	R1= 1000
1	170	CT415115	CT415125	CT415135	CT415145	CT415155
2	330	CT415215	CT415225	CT415235	CT415245	CT415255
3	490	CT415315	CT415325	CT415335	CT415345	CT415355
4	650	CT415415	CT415425	CT415435	CT415445	CT415455

Sideflexing guides for chain
190.5 K750 P=195

TRACKS	A mm	R1= 500	R1= 610	R1= 650	R1= 800	R1= 1000
1	200	CT419116	CT419126	CT419136	CT419146	CT419156
2	395	CT419216	CT419226	CT419236	CT419246	CT419256
3	590	CT419316	CT419326	CT419336	CT419346	CT419356
4	785	CT419416	CT419426	CT419436	CT419446	CT419456

Sideflexing guides for chain
254.0 K1000 P=260

TRACKS	A mm	R1= 500	R1= 610	R1= 650	R1= 800	R1= 1000
1	270	CT425117	CT425127	CT425137	CT425147	CT425157
2	530	CT425217	CT425227	CT425237	CT425247	CT425257

Sideflexing guides for chain
304.8 K1200 P=310

TRACKS	A mm	R1= 500	R1= 610	R1= 650	R1= 800	R1= 1000
1	320	CT430118	CT430128	CT430138	CT430148	CT430158
2	630	CT430218	CT430228	CT430238	CT430248	CT430258

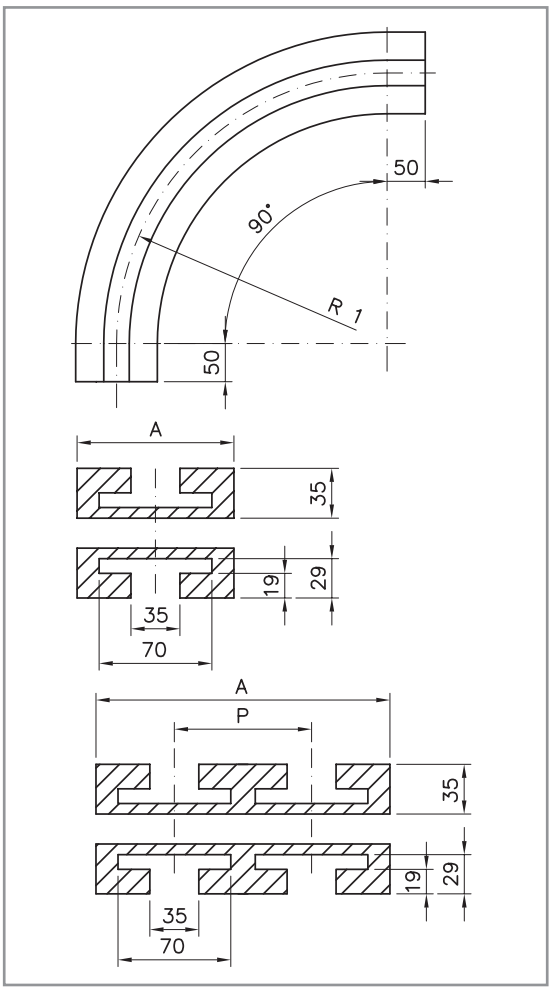

sideflexing guides for TAB type chains

1843 SERIES

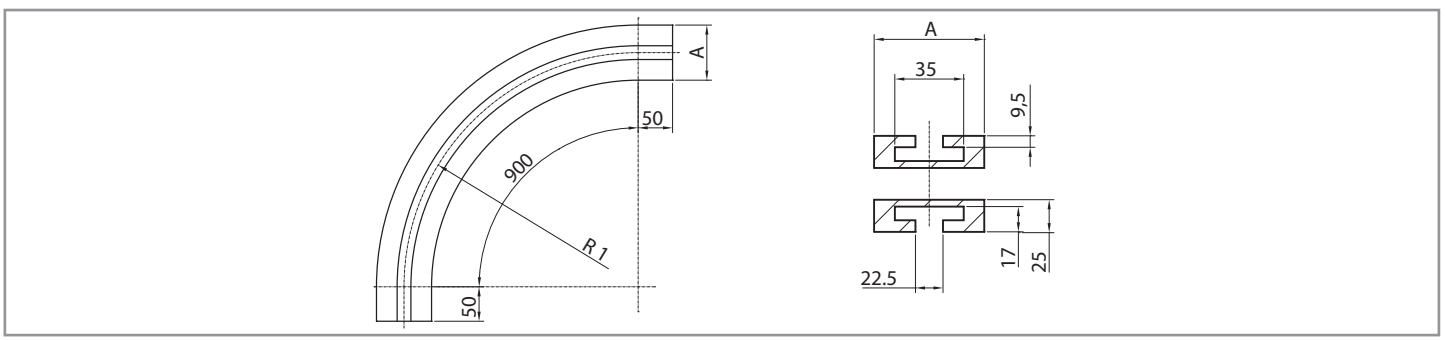

Sideflexing guides for chain
31.8 K125 50.8 K200 82.5 K325

CHAINS WIDTH	A mm	R1= 300	R1= 500
1	50	CT415115	CT415125
2	70	CT415215	CT415225
3	100	CT415315	CT415325

ALWAYS CHECK
THE **A** DIMENSION

sideflexing guides for TAB type chains

1863 / 1873 / 1874 SERIES

Sideflexing guides for chain
TAB 82.5 K325 P=90

TRACKS	A mm	R1= 500
1	100	DT482113
2	190	DT482213
3	280	DT482313
4	370	DT482413

Sideflexing guides for chain
TAB 114.3 K450 P=120

TRACKS	A mm	R1= 500
1	125	DT411114
2	245	DT411214
3	365	DT411314
4	485	DT411414

Sideflexing guides for chain
TAB 152.4 K600 P=160

TRACKS	A mm	R1= 610
1	160	DT415125
2	320	DT415225
3	480	DT415325
4	640	DT415425

Sideflexing guides for chain
TAB 190.5 K750 P=195

TRACKS	A mm	R1= 610
1	200	DT419126
2	395	DT419226
3	590	DT419326
4	785	DT419426

Sideflexing guides for chain
TAB 254.0 K1000 P=260

TRACKS	A mm	R1= 610
1	260	DT425127
2	520	DT425227

Sideflexing guides for chain
TAB 304.8 K1200 P=310

TRACKS	A mm	R1= 610
1	310	DT430128
2	620	DT430228

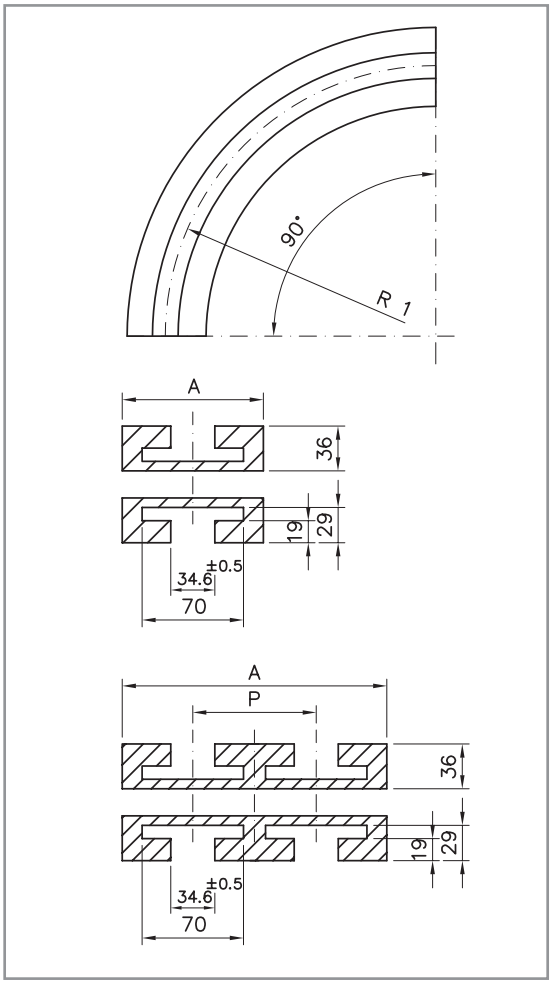

sideflexing guides for chains

1500 / 1700 / 1701 / 1702 SERIES

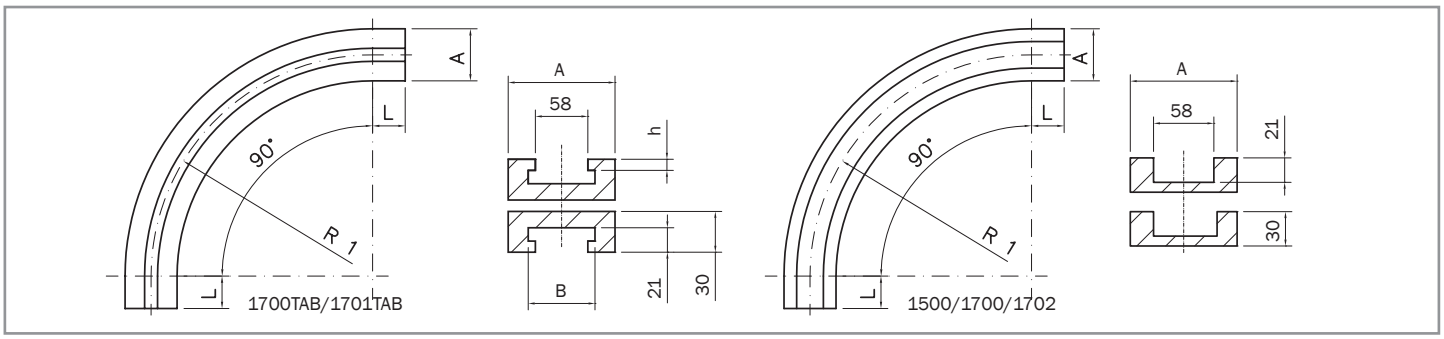

Sideflexing guides for chain
TAB 1700 / 1701 Series

A	B	h	R1	L	CODE
100	75	12	250	50	WT170000
100	75	12	500	50	WT170010
100	75	12	610	50	WT170020

Sideflexing guides for chain
1500 / 1700 / 1702 Series

A	R1	L	CODE
100	250	50	WX170000
100	500	50	WX170010
100	610	50	WX170020

ALWAYS CHECK
THE **A** DIMENSION

straight guides for TAB type chains

780 TAB / 790 TAB / 880 TAB / 881 TAB / 8811 TAB / 882 TAB / 1843 TAB / 1863 TAB / 1873 TAB / 1874 TAB SERIES

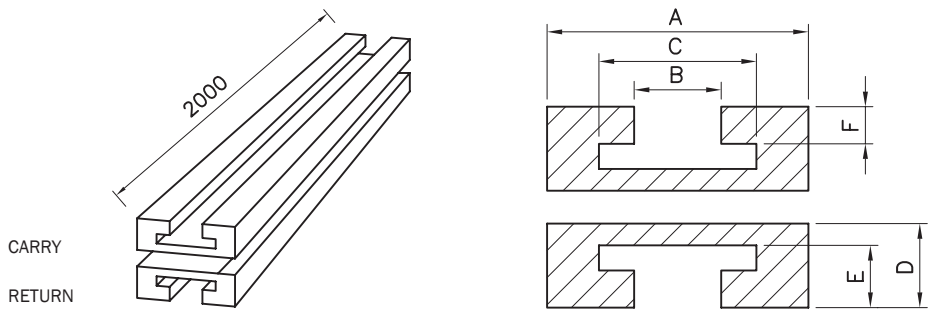

SELECTION TABLES

CHAINS TYPE	WIDTH	GUIDE CODE	A	B	C	D	E	F
880TAB K325	82,5	ST182100	100	45	67	25	18	9,5
881TAB K325								
8811TAB K325								
780TAB K330	83,8	ST182100	100					
790TAB K330								
880TAB K330								
880TAB K450	114,3	ST111100	130					
881TAB K450								
8811TAB K450								
880TAB K750	190,5	ST119100	200					
881TAB K750								
8811TAB K750								
882TAB K450	114.3	ST211100	130	60	84	30	24	15
882TAB K750	190.5	ST219100	200					
882TAB K1000	254	ST225100	270					
882TAB K1200	304.8	ST230100	320					
1843 T K125	31.8	ST532100	50	22.5	35	25	17	9.5
1843 T K200	50.8	ST551100	70	22.3				
1843 T K325	82.5	ST582100	100	22.3				
1863 T K225	57.1	ST657100	75	35	67	35	29	19
1873/1874 T K325	82.5	ST482100	100		70			
1873/1874 T K450	114.3	ST411100	130					
1873/1874 T K600	152	ST415100	170					
1873/1874 T K750	190.5	ST419100	200					
1873/1874 T K1000	254	ST425100	270					
1873/1874 T K1200	304.8	ST430100	320					

Supply: 1 piece; carry return sections are supplied separately.

ALWAYS CHECK THE **A** DIMENSION

straight guides for BEVEL 8° type chains

879 / 880 / 881 / 8811 / 882 SERIES

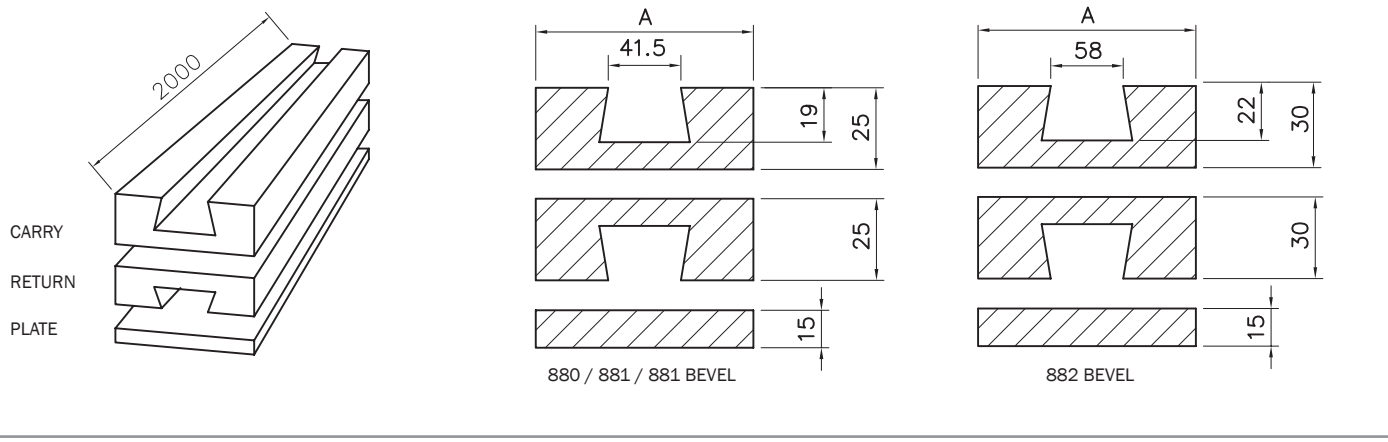

SELECTION TABLES

CHAINS TYPE	WIDTH	GUIDE CODE	RET. PLATE CODE	A
880 - K325	82,5	SB182100	RB182100	100
881 - K325				
8811 - K325				
880 - K450	114,3	SB188100	RB188100	130
881 - K450				
8811 - K450				
880 - K750	190,5	SB119100	RB119100	200
881 - K750				
8811 - K750				

882 - K450	114.3	SB211100	RB188100	130
882 - K750	190.5	SB219100	RB119100	200
882 - K1000	254.0	SB225100	RB225100	270

Supply: 1 piece; carry return sections and return plates are supplied separately.

ALWAYS CHECK THE **A** DIMENSION

guides for straight running type chains

812 / 815 / 8127 / 802 / 8811M / 8817M / 820
828 / 8257 / 821 / 879M / 880M / 882M / 720 / 730 / 780M / 790M SERIES

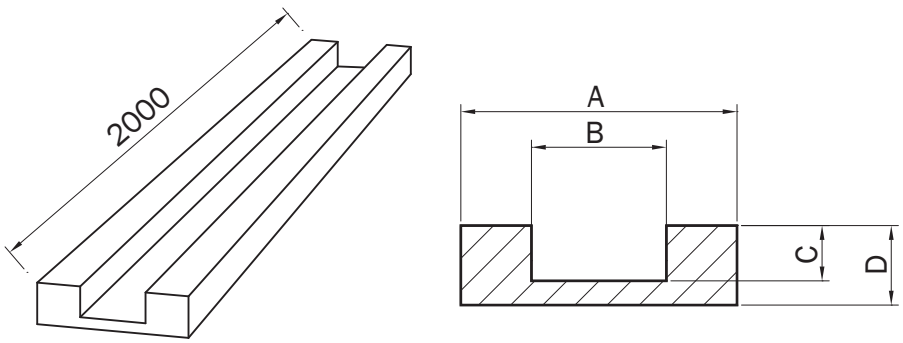

ALWAYS CHECK THE **A** DIMENSION

Guides for straight running type chains
812 / 815 / 8811M / 820 / 828 / 879M / 880M / 720 / 730 / 780M / 790M SERIES

SELECTION TABLES						
CHAINS TYPE	WIDTH	GUIDE CODE	A	B	C	D
M K325	82.5	SM182100	100	44.5	13.5	27
M K330	83.8					
M K450	114.3	SM111100	130			
M K750	190.5	SM119100	200			
K325	82.5	SD182100	100	44.5	13.5	25
K330	83.8					
K450	114.3	SD111100	130			
K750	190.5	SD119100	200			

Guides for straight running type chains
8127 / 8817 / 8257 / 882M / 802 / 821 SERIES

SELECTION TABLES						
CHAINS TYPE	WIDTH	GUIDE CODE	A	B	C	D
8127 K750	190.5	SM219100	200	60	17	32
8817M K750						
8257 K750						
882M K750						
8257 K1000	254	SM225100	270	60	17	32
882M K1000						
8257 K1200	304.8	SM230100	320	60	17	32
882M K1200						
802 K750	190.5	SM819100	200	82.5	13.5	27
821 K750	190.5	SM919100	200	140	17	32
821 K1000	254	SM925100	260			
821 K1200	304.8	SM930100	320			

straight guides for biplanar type chains

1500 / 1700 / 1700TAB / 1701TAB SERIES

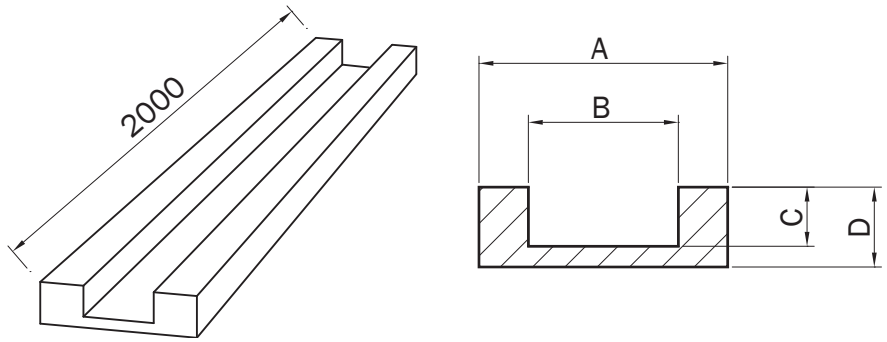

ALWAYS CHECK THE **A** DIMENSION

Straight guides for biplanar type chains
1500 / 1700 Series

SELECTION TABLES						
CHAINS TYPE	WIDTH	GUIDE CODE	A	B	C	D
1500	55	SX170000	100	58	21	30
1700						

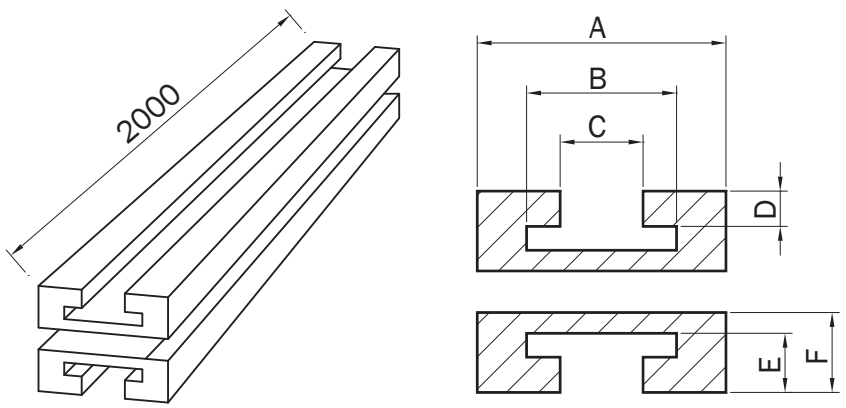

Straight guides for biplanar type chains
1700TAB / 1701TAB Series

SELECTION TABLES								
CHAINS TYPE	WIDTH	GUIDE CODE	A	B	C	D	E	F
1700 TAB	55	ST170000	100	75	58	12	21	30
1701 TAB	53.3							

Supply: 1 piece; carry return sections are supplied separately.

guide rail profiles for conveyor chains

L standard

CODE	COLOUR	BARS	COILS	MATERIAL
PL000V	green	NO	40 / 60 mt	PEUHMW
PL000N	black	NO	40 / 60 mt	PEUHMW

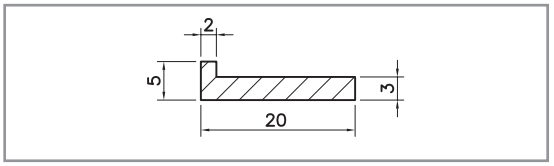

LK

CODE	COLOUR	BARS	COILS	MATERIAL
PLK00V	green	NO	40 / 60 mt	PEUHMW
PLK00N	black	NO	40 / 60 mt	PEUHMW

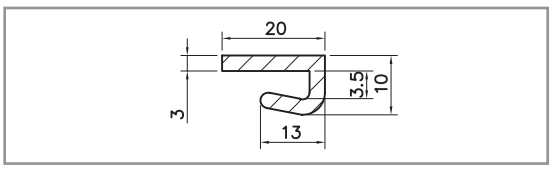

LK40

CODE	COLOUR	BARS	COILS	MATERIAL
PLK40V	green	NO	50 / 60 mt	PEUHMW
PLK40N	black	NO	50 / 60 mt	PEUHMW

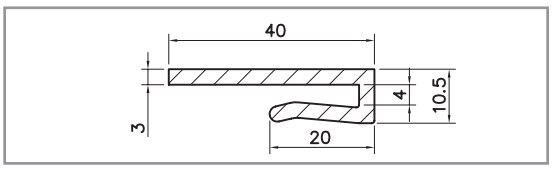

Z standard

CODE	COLOUR	BARS	COILS	MATERIAL
PZ000V	green	NO	50 / 60 mt	PEUHMW
PZ000N	black	NO	50 / 60 mt	PEUHMW

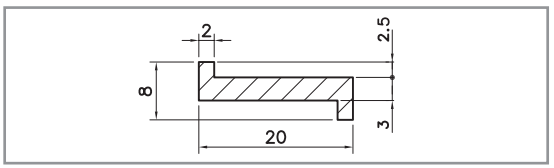

ZR

CODE	COLOUR	BARS	COILS	MATERIAL
PZR00V	green	NO	50 / 60 mt	PEUHMW
PZR00N	black	NO	50 / 60 mt	PEUHMW

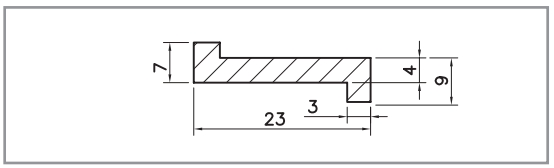

ZK

CODE	COLOUR	BARS	COILS	MATERIAL
PZK00V	green	NO	40 / 60 mt	PEUHMW
PZK00N	black	NO	40 / 60 mt	PEUHMW

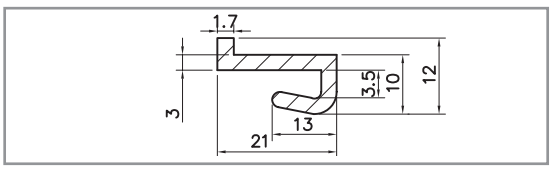

T standard

CODE	COLOUR	BARS	COILS	MATERIAL
PT000V	green	NO	50 / 60 mt	PEUHMW
PT000N	black	NO	50 / 60 mt	PEUHMW

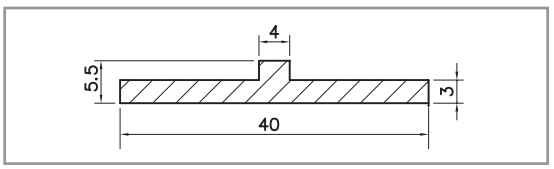

TR

CODE	COLOUR	BARS	COILS	MATERIAL
PTR00V	green	6 mt	50 / 60 mt	PEUHMW
PTR00N	black	6 mt	50 / 60 mt	PEUHMW

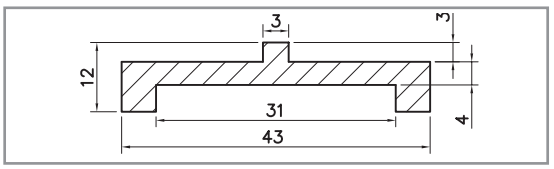

U

CODE	COLOUR	BARS	COILS	MATERIAL
PU000V	green	6 mt	50 / 60 mt	PEUHMW
PU000N	black	6 mt	50 / 60 mt	PEUHMW

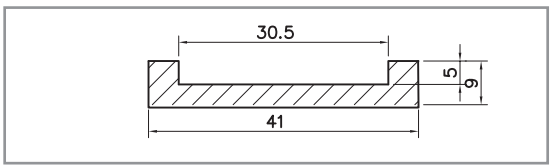

guide rail profiles for conveyor chains

U - 1

CODE	COLOUR	BARS	COILS	MATERIAL
PU100N	black	6 mt	50 / 60 mt	PEUHMW

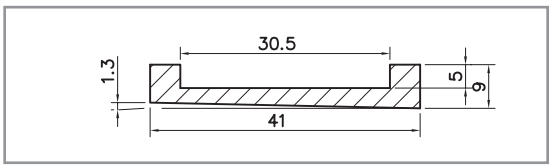

GL

CODE	COLOUR	BARS	COILS	MATERIAL
PGL00N	black	2 / 3 / 6 mt	50 mt	PEUHMW

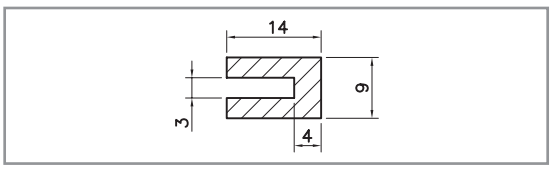

RP

CODE	COLOUR	BARS	COILS	MATERIAL
PRP00V	green	2 / 3 / 6 mt	NO	PEUHMW
PRP00N	black	2 / 3 / 6 mt	NO	PEUHMW
PRP00W	white	2 / 3 / 6 mt	NO	PEUHMW

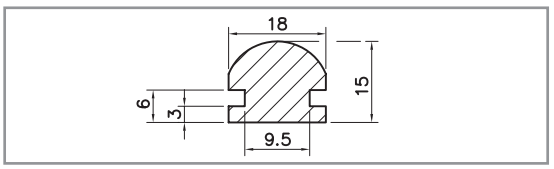

C 30 x 3

CODE	COLOUR	BARS	COILS	MATERIAL
P3030V	green	2 / 3 / 4 mt	NO	PEUHMW
P3030N	black	2 / 3 / 4 mt	NO	PEUHMW

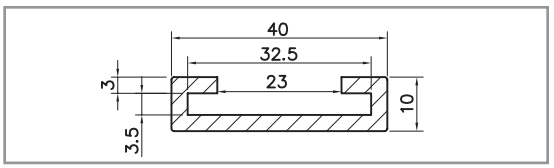

C 40 x 8

CODE	COLOUR	BARS	COILS	MATERIAL
P4080V	green	2 / 3 / 4 mt	NO	PEUHMW
P4080N	black	2 / 3 / 4 mt	NO	PEUHMW

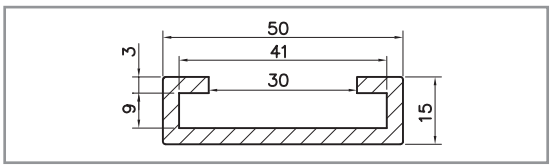

C 50 x 5

CODE	COLOUR	BARS	COILS	MATERIAL
P5050N	black	2 / 3 / 6 mt	NO	PEUHMW

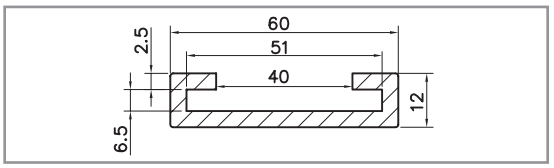

C 50 x 6

CODE	COLOUR	BARS	COILS	MATERIAL
P5060V	green	2 / 3 / 4 mt	NO	PEUHMW
P5060N	black	2 / 3 / 4 mt	NO	PEUHMW

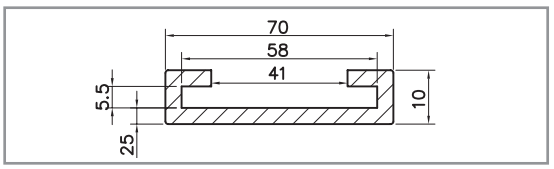

C 70 x 6

CODE	COLOUR	BARS	COILS	MATERIAL
P7060V	green	2 / 3 / 4 mt	NO	PEUHMW
P7060N	black	2 / 3 / 4 mt	NO	PEUHMW

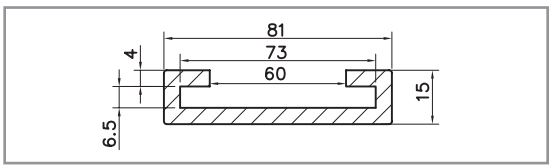

C 43 x 13

CODE	COLOUR	BARS	PACK	MATERIAL
P4313V	green	2 / 3 / 6 mt	36 mt	PEUHMW
P4313N*	black	2 / 3 / 6 mt	36 mt	PEUHMW

* on request

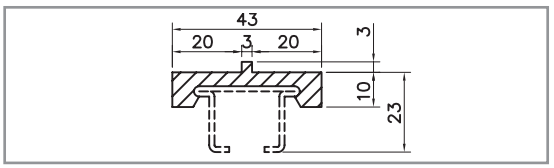

guide rail profiles for conveyor chains

C 40 x 10

CODE	COLOUR	BARS	MATERIAL
P4010V	green	2 / 3 / 6 mt	PEUHMW
P4010N*	black	2 / 3 / 6 mt	PEUHMW

* on request

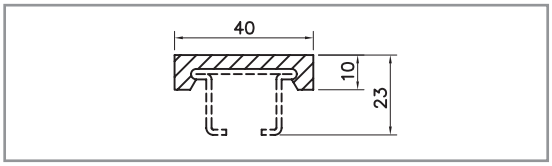

Metal profile OMEGA

CODE	BARS	MATERIAL
M30195	2 / 3 / 6 mt	AISI430
M301955	2 / 3 / 6 mt	AISI304

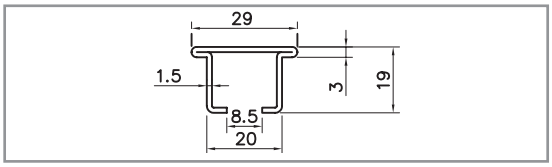

Metal profile

CODE	BARS	A mm	MATERIAL
PM406SS	3 / 6 mt	6	AISI304
PM408SS	3 / 6 mt	8	AISI304
PM4010SS	3 / 6 mt	10	AISI304

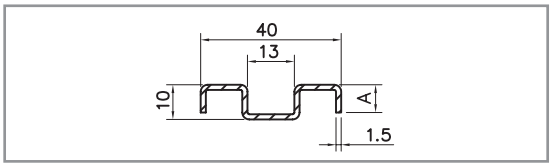

Metal profile 40 x 10

CODE	BARS	A mm	MATERIAL
PM40H8SS	3 / 6 mt	8	AISI304

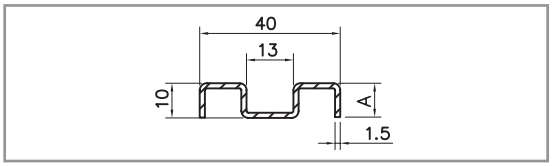

Profile 12

CODE	COLOUR	BARS	PACK	MATERIAL
PR12WS	white	3 / 6 mt	30 mt	PE / ZN
PR12WSS	white	3 / 6 mt	30 mt	PE / AISI304
PR12BS	black	3 / 6 mt	30 mt	PE / ZN
PR12BSS	black	3 / 6 mt	30 mt	PE / AISI304

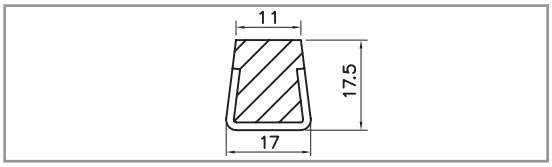

Profile R7

CODE	COLOUR	BARS	PACK	MATERIAL
PR7WS	white	3 / 6 mt	30 mt	PE / ZN
PR7WSS	white	3 / 6 mt	30 mt	PE / AISI304
PR7BS	black	3 / 6 mt	30 mt	PE / ZN
PR7BSS	black	3 / 6 mt	30 mt	PE / AISI304

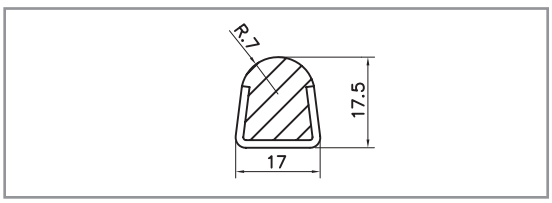

Profile R20

CODE	COLOUR	BARS	PACK	MATERIAL
PR20WS	white	3 / 6 mt	30 mt	PE / ZN
PR20WSS	white	3 / 6 mt	30 mt	PE / AISI304
PR20BS	black	3 / 6 mt	30 mt	PE / ZN
PR20BSS	black	3 / 6 mt	30 mt	PE / AISI304

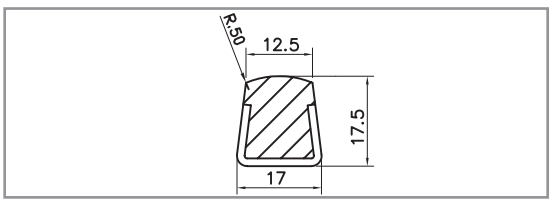

guide rail profiles for conveyor chains

SG - 01

CODE	COLOUR	BARS
PSG10B	blue	2 / 3 / 6 mt
PSG10N	black	2 / 3 / 6 mt

SG - 02

CODE	COLOUR	BARS
PSG20B	blue	2 / 3 / 6 mt
PSG20N	black	2 / 3 / 6 mt

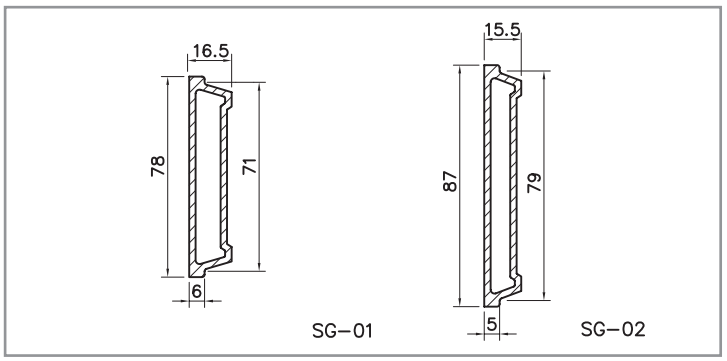

Clamps for SG - 01

CODE	COLOUR
CSG11N	black

minimum 50 pcs

Clamps for SG - 02

CODE	COLOUR
CSG21N	black

minimum 100 pcs

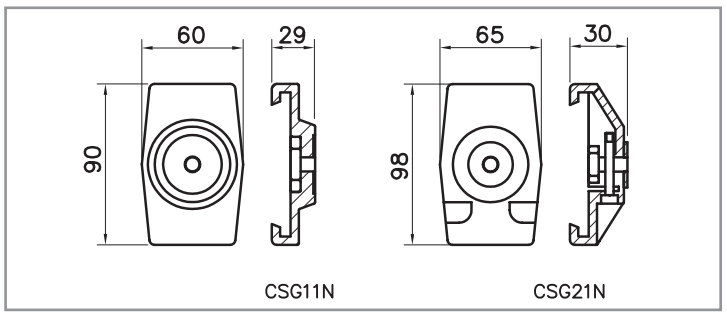

metal profiles

Metal profile C3 / C5 / C9

CODE	A	B	C	d	BARS	MATERIAL
MC3S	20	10	10	1.5	2 / 3 / 6 mt	ZnplSt
MC3SS	20	10	10	1.5	2 / 3 / 6 mt	AISI304
MC5S	28	14	14	1.5	2 / 3 / 6 mt	ZnplSt
MC5SS	28	14	14	1.5	2 / 3 / 6 mt	AISI304
MC9S	38	22	22	1.5	2 / 3 / 6 mt	ZnplSt
MC9SS	38	22	22	1.5	2 / 3 / 6 mt	AISI304

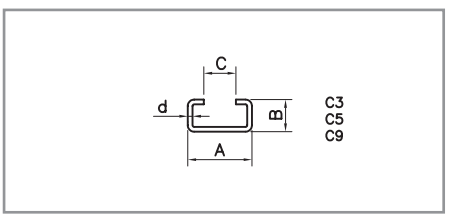

Metal profile C10 / C11

CODE	A	B	C	d	BARS	MATERIAL
MC105	30	24	20	1.5	2 / 3 / 6 mt	ZnplSt
MC10SS	30	24	20	1.5	2 / 3 / 6 mt	AISI304
MC11S	45	40	31	1.5	2 / 3 / 6 mt	ZnplSt
MC11SS	45	40	31	1.5	2 / 3 / 6 mt	AISI304

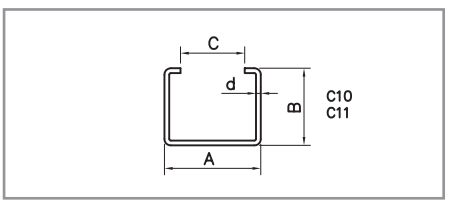

Metal profile C14 / C15

CODE	A	B	C	d	BARS	MATERIAL
MC14S	31	25	20	2.0	2 / 3 / 6 mt	ZnplSt
MC14SS	31	25	20	2.0	2 / 3 / 6 mt	AISI304
MC15S	31	25	20	2.0	2 / 3 / 6 mt	ZnplSt
MC15SS	31	25	20	2.0	2 / 3 / 6 mt	AISI304

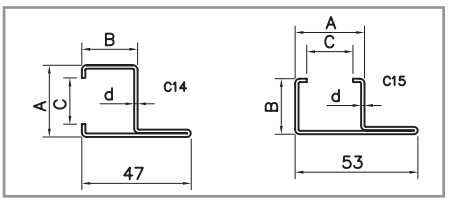

conveyor belts

Example of a conveyor belt with chain return guides.

It's important to provide a gap for the catenary sag under the sprockets, in order to avoid excessive tension on the hinges and to make an eventual chain disassembly easies. The chain return occurs on guides in self-lubricating material (PEUHMW or Nylatron); the chain entry radius should be anyway greater than the backflex radius (Rd).

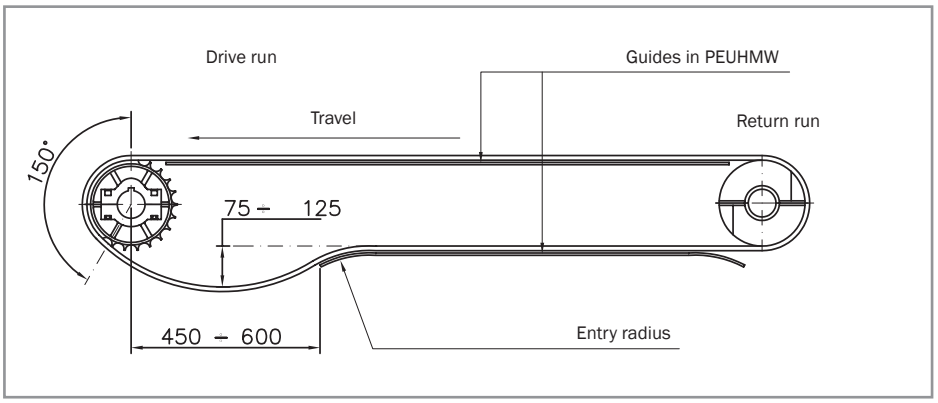

Example of a conveyor belt with chain return rollers.

It's important to provide a gap for the catenary sag under the sprockets, in order to avoid excessive tension on the hinges and to make an eventual chain disassembly easies. Chain return rollers should have a diameter corresponding at least to twice the dimension of the chain backflex radius (Rd).

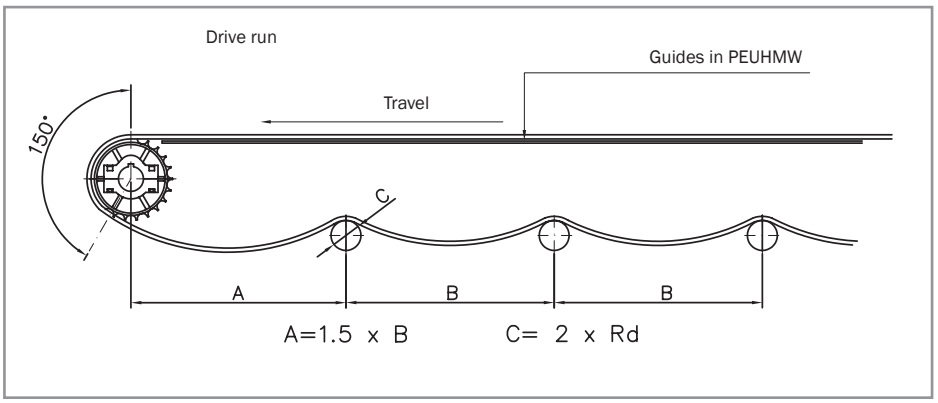

conveyor design

A few examples of slide guide assembly according to chain type are hereunder represented.

It's important to remember that for narrow-base products or products conveyed or more tracks the fundamental value is chain distance (Gap).
The lower this value is, the less unstable the conveyed product becomes.

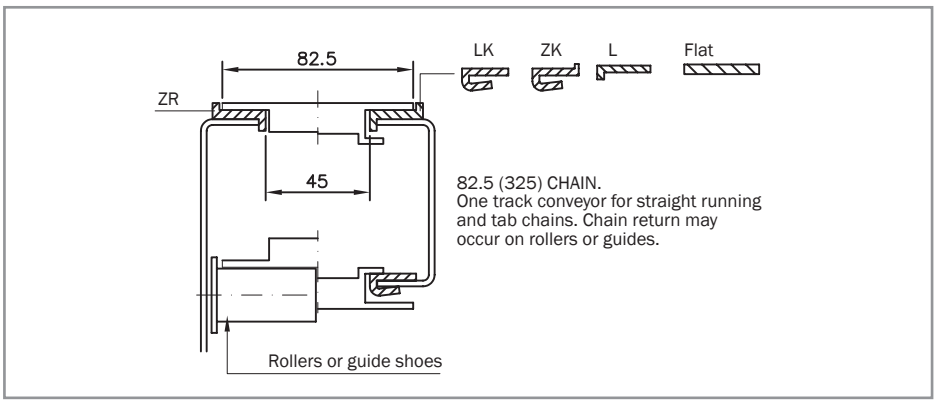

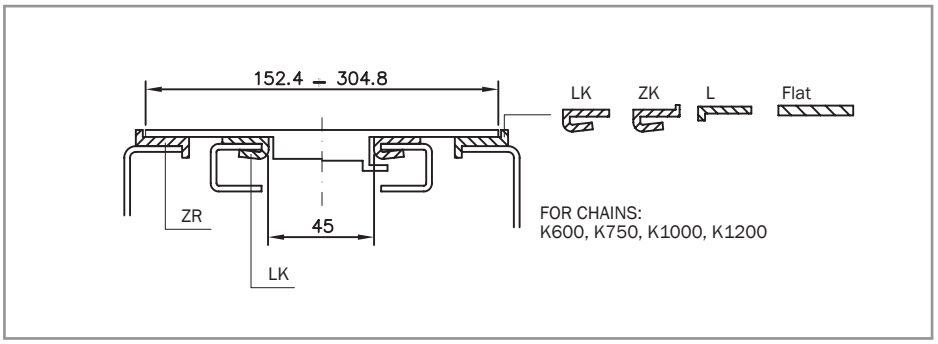

conveyor design

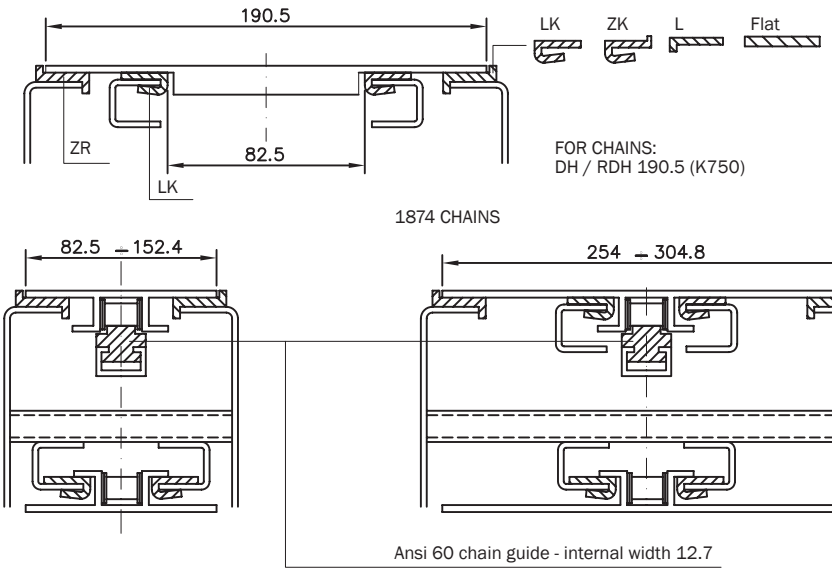

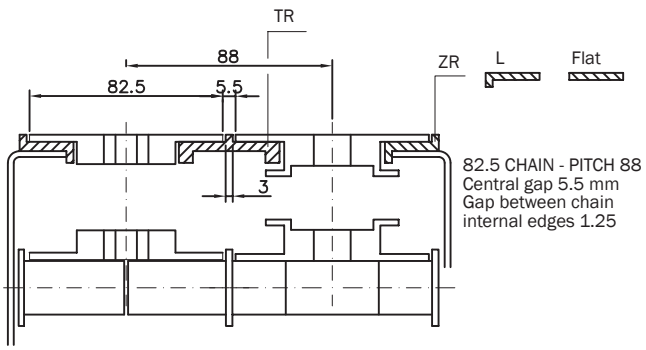

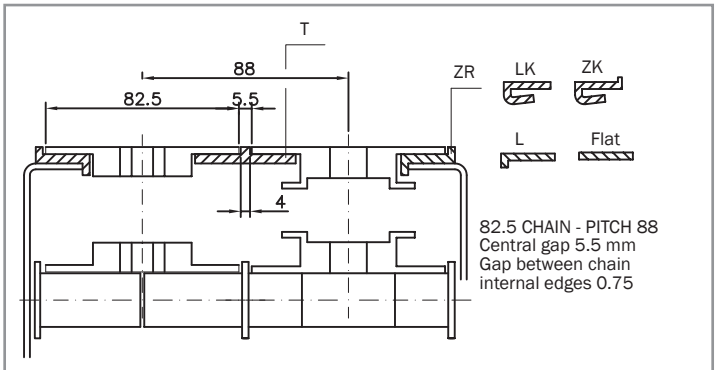

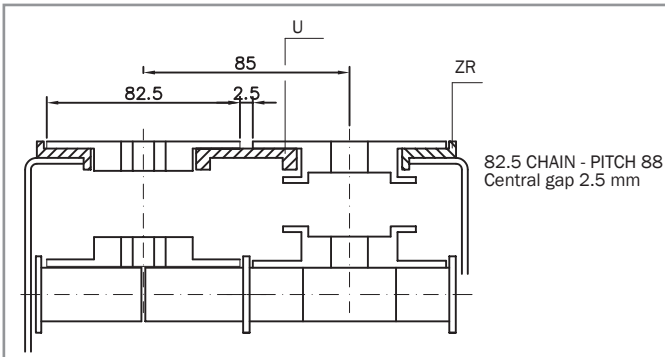

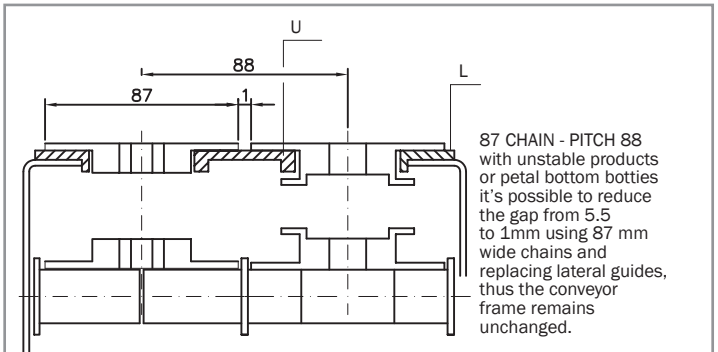

Every care has been taken to ensure the accuracy of the information contained in this catalogue
but no liability can be accepted for any errors or omissions.

Adeptrans Cadenas y Transmisiones S.L.

Chain Sizing

MakesMoving

916 926 286 · info@adeptrans.es

chain sizing

steel and stainless steel chains

According to the maximum allowable working load method. Chain sizing consists of a comparison between the chain tension at headshaft, which a chain is subject to, and the maximum allowable working load of the chain itself. The following formulas allow an evaluation of the chain tension at headshaft as a function of the different load conditions.

Ft	Chain tension at headshaft (N)	α	Bending angle (degrees)
Fo	Chain tension on return track (N)	K	Lenght factor table (table D)
F1, F2, . . .	Sum of all loads (N)	T	Curve factor (table D)
Wc	Chain weight (Kg/m)	f1	Friction factor between chain and wear strips (table A)
Wm	Conveyed product weight (Kg/m)		
L	Horizontal conveyor length (m)	f2	Friction factor between chain and conveyed products (table A)
L1, L2, . . .	Conveyor track length (m)		
H	Vertical conveyor elevation (m)	fp	Start up factor (table B)
Ls	Conveyor length of the section where accumulation occurs (m)	S	Slippage factor (table C)
L1s, L2s, . . .	Conveyor length of the section where accumulation occurs (m)	9.81	Gravity acceleration (m/s^2)
R	Curve radius (m)		

symbols

Chain materials: carbon steel and stainless steel

A	f_1		f_2		
	Friction factor between chain and wear strips		Friction factor between chain and conveyed products		
Lubrication used	Steel	High density polyethylene, nylatron®	Cardboard plastic	Metal	Glass ceramic
Dry*	0,50	0,20	0,30	0,45	0,45
Water	0,40	0,15	0,25	0,40	0,40
Soapy water	0,20	0,12	0,15	0,20	0,25
Oil	0,20	0,08	-	0,15	0,20

B	Start up factor
Start ups per hour	f_p
0	1,0
5	1,4
10	1,7
15	1,8
20	1,9
25	2,0

C	Slippage factor
Slippage time percentage	S
0	0
10	0,5
20	0,7
30	0,8
40	0,9
50>	1,0

* Although the theoretical calculation is carried out in dry running conditions, we recommend the use of lubricated chains in order to avoid chain blocking and friction.

D	K	T			
		Curve factor			
		Stainless steel chain			
Bending angle	Lenght factor	Steel wear strips		High density polyethylene and nylatron® wear strips	
degrees α		Dry*	Lubricated	Dry*	Lubricated
15	0,25	1,20	1,05	1,10	1,05
30	0,52	1,30	1,10	1,20	1,10
45	0,79	1,40	1,20	1,30	1,20
60	1,05	1,60	1,30	1,50	1,25
90	1,57	2,00	1,50	1,80	1,35
120	2,09	2,50	1,70	2,20	1,50
150	2,62	3,10	1,90	2,70	1,75
180	3,14	3,50	2,10	3,00	1,90

Side flexing conveyor
In this case the calculation of the chain tension at headshaft is carried out as the sum of successive loads **(draw. 1)**:
L2 = K(α2) x R2
L4 = K(α4) x R4

1 - Return run
the evaluation of the chain tension in the return run is carried out by starting at the driven sprockets following the movement of the chain itself up to the return sprocket **(draw 2)**:

Track FE	F5 = Wc x L5 x f1
Track FD	F4 = [F5 + Wc x L4 x f1] x T(α4)
Track FC	F3 = F4 + Wc x L3 x f1
Track FB	F2 = [F3 + Wc x L2 x f1] x T(α2)
Track FA	F1 = F2 + Wc x L1 x f1
	F0 = F1 x fp x 9,81

Written in a more explicit manner:
F0 = {[(L5+L4) x Wc x f1 x T(α4)+(L3+L2) x Wc x f1] x T(α2)
+ L1 x Wc x f1} x fp x 9,81

2 - Drive run
• Chain tension at headshaft without accumulation
The evaluation of the chain tension in the conveying run is carried out by starting from the return sprocket following the movement of the chain itself up to the drive sprocket **(draw. 3)**:

Track AB	F1 = F0 + (Wc+Wm) x L1 x f1 + fp x 9,81
Track AC	F2 = [F1 + (Wc+Wm) x L2 x f1 + fp x 9,81] x T(α2)
Track AD	F3 = F2 + (Wc+Wm) x L3 x f1 + fp x 9,81
Track AE	F4 = [F3 + (Wc+Wm) x L4 x f1+ fp x 9,81] x T(α4)
Track AF	F5 = F4 + (Wc+Wm) x L5 x f1 + fp x 9,81

• Chain tension at headshaft with accumulation
The component of the chain tension at headshaft due to the accumulation of material conveyed is evaluated by starting from the return sprocket towards the drive sprocket, for the only track involved by the accumulation **(draw. 3)**.

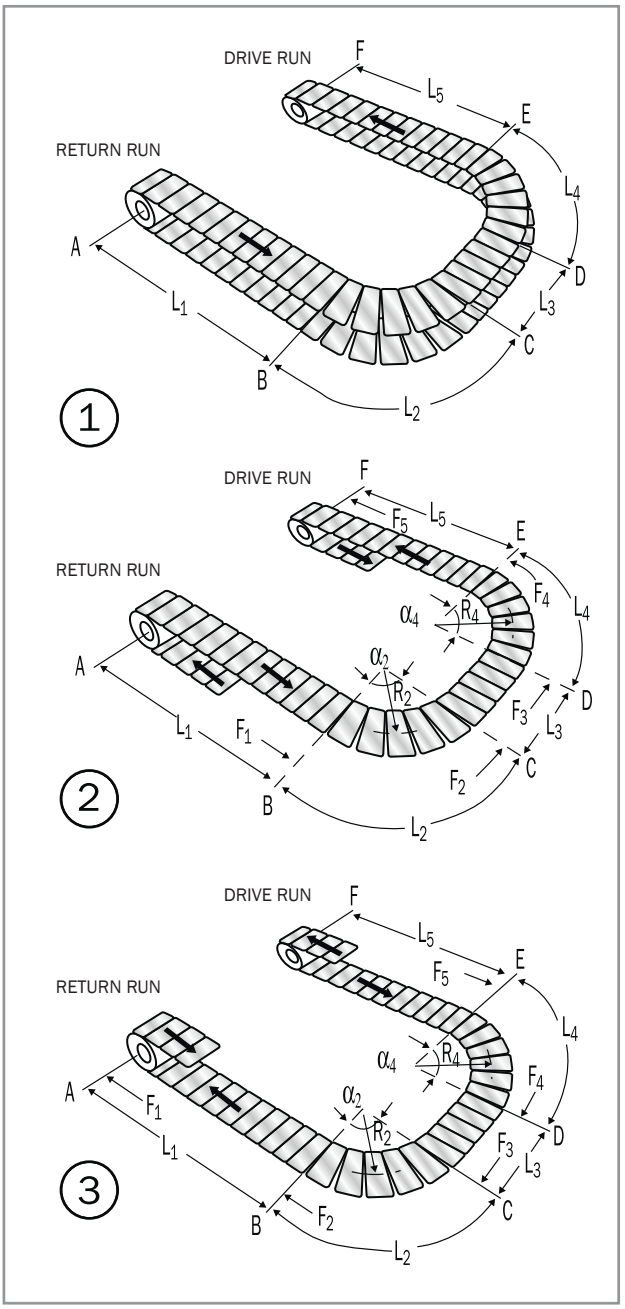

In this case the total chain tension at headshaft is given by the sum of the component without accumulation plus the one due to the accumulation of the material:

Track AB	F1 = F0 + [(Wc+Wm) x L1 x f1 x fp + L1s x Wm x f2 x S] x 9,81
Track AC	F2 = {F1 + [(Wc+Wm) x L2 x f1 x fp + L2s x Wm x f2 x S] x 9,81} x T(α2)
Track AD	F3 = F2 + [(Wc+Wm) x L3 x f1 x fp + L3s x Wm x f2 x S] x 9,81
Track AE	F4 = {F3 + [(Wc+Wm) x L4 x f1 x fp + L4s xWm x f2 x S] x 9,81} xT(α4)
Track AF	F5 = F4 + [(Wc+Wm) x L5 x f1 x fp + L5s x Wm x f2 x S] x 9,81

Horizontal conveyor
Without accumulation
Ft = (2Wc + Wm) x L x f1 x fp x 9,81
With accumulation
Ft = [(2Wc + Wm) x L x f1 x fp + Ls x Wm x f2 x S] x 9,81

Inclined conveyor
Without accumulation
Ft = [(2Wc + Wm) x L x f1 x fp + (Wc + Wm) x H] x9,81
With accumulation
Ft = [(2Wc + Wm) x L x f1 x fp + (Wc + Wm) x H + Ls x Wm x f2 x S] x 9,81

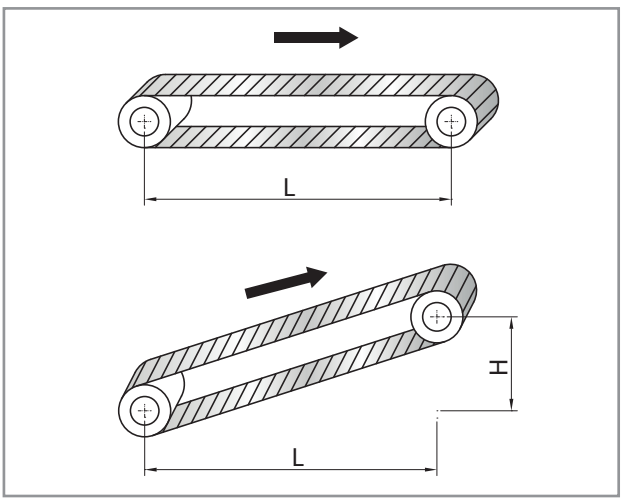

Calculation of Power (P) $P = \frac{F_t \times v}{6 \times 10^4}$

where: (P) = Power (kW),
F_t = Chain tension = Chain tension at headshaft on the chain (N),
v = Speed (m/min)

symbols

symbols for straight running chains

1864. . . .	Plate top chain
7.24.000	Double reinforced hinged slat chain - Stella D Mod.
7.94.000	Double hinged slat chain - Accate Mod.
7.14.000	Double hinged slat chain - Stella D Mod.
S.7.04.000	Double hinged slat chain - Super Mod.
SG.7.04.000	Double hinged slat chain - Super DHG Mod.
7.04.000	Double hinged slat chain - Standard Mod.
C.7.90.000	Single hinged slat chain - Accate C Mod.
7.90.000	Single hinged slat chain - Accate Mod.
7.25.000	Single hinged slat chain - 316 Mod.
7.10.000	Single hinged slat chain - Stella D Mod.
DX.7.00.000	Single hinged slat chain - Superspeed Mod.
D.7.00.000	Single hinged slat chain - Wear Proof Mod.
S.7.00.175	Single reinforced hinged slat chain - Super Mod.
S.7.00.000	Single hinged slat chain - Super Mod.
SG.7.00.175	Single reinforced hinged slat chain - Super G Mod.
SG.7.00.000	Single hinged slat chain - Super G Mod.
7.00.000	Single hinged slat chain - Standard Mod.
S.9.00.000	Single hinged slat chain - 1 Inch Mod.
7.10.010	Mignon hinged slat chain - Stella D Mod.
7.00.010	Mignon hinged slat chain - Standard Mod.
8.25.000	Mignon hinged slat chain - Super Mod.
SG.8.25.000	Mignon hinged slat chain - Super G Mod.

symbols for sideflexing chains

1874. . . .	Plate top chain
C.8.93.000	Hinged slat chain - Flex RXMA C Mod.
8.99.000	Hinged slat chain - Flex FMA2 Mod.
8.93.000	Hinged slat chain - Flex RXMA Mod.
8.33.000	Hinged slat chain - Flex RXM 316 Mod.
8.13.000	Hinged slat chain - Flex RXM Mod.
8.16.000	Hinged slat chain - Flex FM Mod.
8.19.000	Hinged slat chain - Flex FM2 Mod.
D.8.26.000	Hinged slat chain - Flex FMD Mod.
S.8.23.000	Hinged slat chain - Flex RXMS Mod.
SG.8.23.000	Hinged slat chain - Flex RXMS G Mod.
S.8.26.000	Hinged slat chain - Flex FMS Mod.
S.8.29.000	Hinged slat chain - Flex FMS2 Mod.
8.26.000	Hinged slat chain - Flex FMC Mod.
8.23.000	Hinged slat chain - Flex RXMC Mod.
D.7.08.000	Hinged slat chain - New Flex Mag D Mod.
S.7.08.175	Reinforced hinged slat chain - New Flex Mag Mod.
S.7.08.000	Hinged slat chain - New Flex Mag Mod.
7.08.000	Hinged slat chain - New Flex Mag C Mod.
SG.7.08.175	Reinforced hinged slat chain - New Flex Mag G Mod.
SG.7.08.000	Hinged slat chain - New Flex Mag G Mod.

chain selection

Having evaluated the chain tension at headshaft which the chain is subject to, and calculated the speed/length of the conveyor ratio, the two values are stated in figure 4. The chain suitable for the use in question is the one whose curve is immediately above the intersection of the two values.

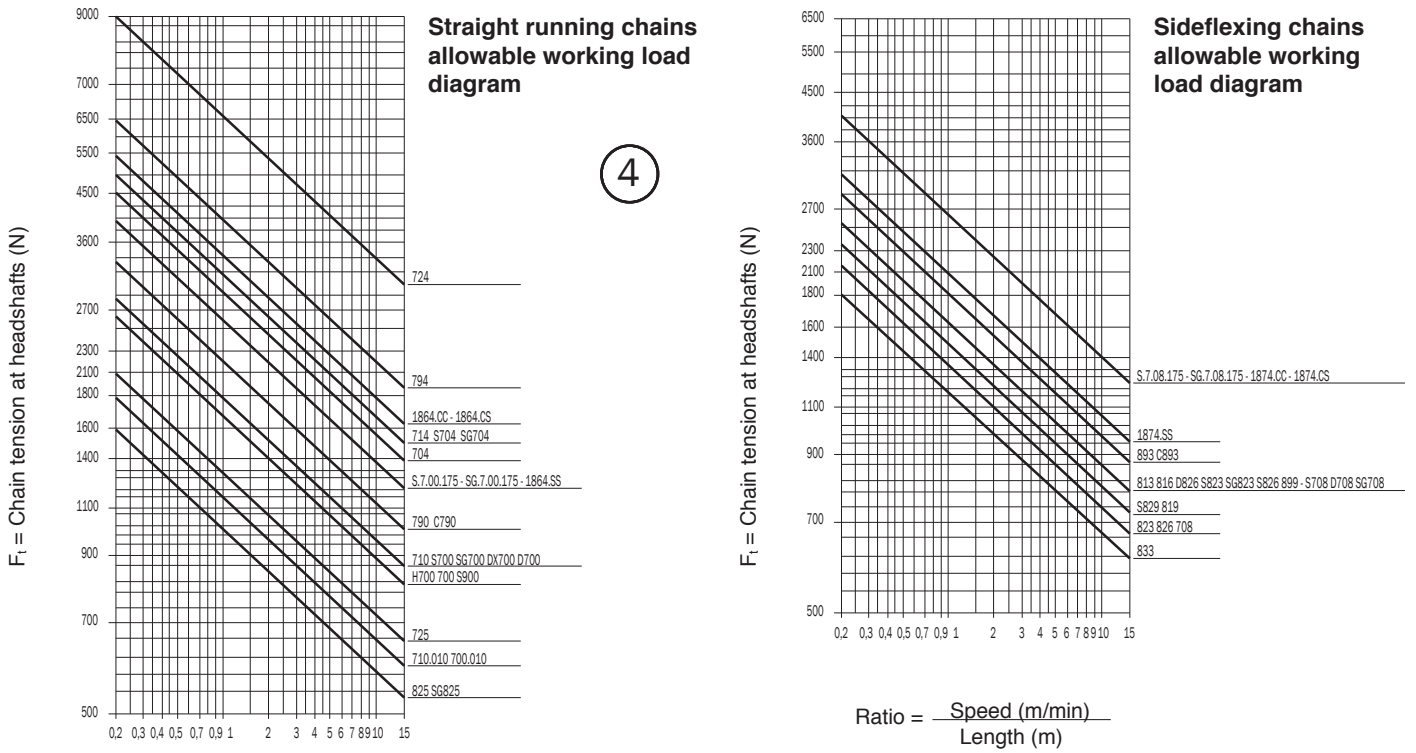

example

The 7.10.040 chain, dry-operating, conveys glass wine bottles. The bottles weigh 1,5 Kg each and they are placed on the chain at 20 cm intervals (5 bottles per metre). The chain stops and restarts 10 times per hour.
There is accumulation of the 20% operating time and on a length of 8 metres.

Aims:
- Chain checking;
- Calculation of the power needed by the shaft.

Start up data:
- Speed (v) = 45 m/min.
- Start up factor (fp) = 1,7 (table B)
- Slippage time percentage = 20%
- Slippage factor (S) = 0,7 (table C)
- Length with accumulation (Ls) = 8 m
- Friction factor (f2) = 0,45 (table A: chain-glass bottle)
- Conveyor length (L) = 12 m
- Chain weight (Wc) = 2,6 Kg/m
- Conveyed product weight (Wm) = 7,5 Kg/m
- Friction factor (f1) = 0,20 (table A: chain-polyethylene wear strip)

Calculation of the chain tension at Headshaft (Ft)

Ft = [(2Wc + Wm) x L x f1 x fp + Ls x Wm x f2 x S] x 9,81
= [(2 x 2,6 + 7,5) x 12 x 0,20 x 1,7 + 8 x 7,5 x 0,45 x 0,7] x 9,81
= 693,72 N

The “allowable working load” diagram shows that the maximum chain tension at headshaft available for that chain and for that speed ratio is 1300 N. The selected chain is therefore suitable for our purpose.

Calculation of the Speed/Length ratio (v/ L)
v/ L = 45/ 12 = 3,75 m/min/m

Calculation of Power (P)

$$P = \frac{F_t \times v}{6 \times 10^4} = \frac{693.72 \times 45}{6 \times 10^4} = 0.520 \text{ kW}$$

contents

page	model
08	Materials Metal Chains
10	Straight Running Chains Single Hinge - 812 SUPER - HARD INOX
11	Straight Running Chains Single Hinge - 812 SUPERSPEED - HQ INOX
11	Straight Running Chains Single Hinge - 812 WEAR PROOF - HQ INOX
11	Straight Running Chains Single Hinge - 812 STANDARD - INOX
12	Straight Running Chains Single Hinge - 815 316 - INOX 316
12	Straight Running Chains Single Hinge - 815 STELLA D - INOX 18/8
13	Straight Running Chains Single Hinge - 815 ACCATE C - CARBON STEEL
13	Straight Running Chains Single Hinge - 815 ACCATE - CARBON STEEL
14	Mignon Straight Running Chains Single Hinge - 812 STANDARD - INOX
14	Mignon Straight Running Chains Single Hinge - 815 STELLA D - INOX 18/8
15	Mignon Straight Running Chains Single Hinge - 812 SUPER - HARD INOX
15	Mignon Straight Running Chains Single Hinge - 815 ACCATE - CARBON STEEL
16	Straight Running Chains Single Hinge 1 Inch - 512 SUPER - HARD INOX
17	Straight Running Chains Single Reinforced Hinge - 8127 SUPER - HARD INOX
17	Straight Running Chains - Single Reinforced Hinge - 8127 WEAR PROOF - HQ INOX
18	Straight Running Chains - Single Reinforced Hinge With Tabs - 8127 SUPER - HARD INOX
19	Straight Running Chains Double Hinge - 802 STANDARD - INOX
19	Straight Running Chains Double Hinge - 802 SUPER - HARD INOX
19	Straight Running Chains Double Hinge - 805 STELLA D - INOX 18/8
20	Straight Running Chains Double Hinge - 802 ACCATE - CARBON STEEL
21	Straight Running Chains Double Reinforced Hinge - 804 STELLA D - INOX 18/8
22	Sideflexing Hinged Slat Chains Single Hinge - 881 FLEX RXMC - INOX
23	Sideflexing Hinged Slat Chains Single Hinge - 881 FLEX RXMS - HARD INOX
23	Sideflexing Hinged Slat Chains Single Hinge - 881 FLEX RXM - INOX 18/8
23	Sideflexing Hinged Slat Chains Single Hinge - 881 FLEX RXM - INOX 316
24	Sideflexing Hinged Slat Chains Single Hinge - 881 FLEX RXMA - CARBON STEEL
25	Sideflexing Hinged Slat Chains Single Hinge Reduced Plate Gap - 8811 FLEX FMC - INOX
26	Sideflexing Hinged Slat Chains Single Hinge Reduced Plate Gap - 8811 FLEX FMS - HARD INOX
26	Sideflexing Hinged Slat Chains Single Hinge Reduced Plate Gap - 8811 FLEX FMD - HQ INOX
26	Sideflexing Hinged Slat Chains Single Hinge Reduced Plate Gap - 8811 FLEX FM - INOX 18/8
27	Sideflexing Hinged Slat Chains Reduced Sideflexing Radius R190 FLEX FMS2 - R = 190mm - 8811 HARD INOX
27	Sideflexing Hinged Slat Chains Reduced Sideflexing Radius - R190 FLEX FM2 - R = 190mm - 8811 INOX 18/8
27	Sideflexing Hinged Slat Chains Reduced Sideflexing Radius - R190 FLEX FMA2 - R = 190mm - 8811 CARBON STEEL
28	Sideflexing Hinged Slat Chains Reduced Plate Gap - 8811 for Magnetic Systems NEW FLEX MAG - INOX
28	Sideflexing Hinged Slat Chains Reduced Plate Gap - 8811 for Magnetic Systems NEW FLEX MAG - HARD INOX
28	Sideflexing Hinged Slat Chains Reduced Plate Gap - 8811 for Magnetic Systems NEW FLEX MAG D - HQ INOX
29	Sideflexing Chains for Magnetic Systems Reinforced Hinge - 8811 NEW FLEX MAG - HARD INOX
29	Sideflexing Chains for Magnetic Systems Reinforced Hinge - 8811 NEW FLEX MAG D - HQ INOX
29	Sideflexing Chains For Magnetic Systems Reinforced Hinge - 8811 NEW FLEX MAG TAB - HARD INOX
30	Straight Running Chains With Rubber Inserts for Inclined Conveyors SUPER G / DHG - HARD INOX
31	Straight Running Chains With Rubber Inserts for Inclined Conveyors SUPER G / DHG - HARD INOX
32	Sideflexing Hinged Slat Chains With Rubber Inserts - 881 for Inclined Conveyors FLEX RXMS G - HARD INOX
33	Sideflexing Hinged Slat Chains With Rubber Inserts - 8811 for Inclined Conveyors FLEX FMS G / NEW FLEX G MAG HARD INOX
34	Sideflexing Hinged Slat Chains With Rubber Inserts for Inclined Conveyors FLEX FMS G / NEW FLEX G MAG HARD INOX
35	Sideflexing Hinged Slat Chains With Rubber Inserts - 881 for Inclined Conveyors FLEX RXMS G - HARD INOX
36	Straight Running Plate Top Chains 1864 SERIES
37	Sideflexing Plate Top Chains 1874 SERIES
38	Steel Corrosion Resistance Table LEGEND

page	model
42	Materials Plastic Chains
44	Thermoplastic Straight Running Chains SINGLE HINGE - 820 SERIES D 820 - ACETAL RESIN
44	Thermoplastic Straight Running Chains SINGLE HINGE - 820 SERIES LFA 820 - LOW FRICTION ACETAL RESIN
45	Thermoplastic Straight Running Chains SINGLE HINGE - 820 SERIES SP 820 - SUPER PERFORMANCE ACETAL RESIN
45	Thermoplastic Straight Running Chains SINGLE HINGE - 820 SERIES AK 820 - HIGH WEAR RESISTANT ACETAL RESIN
45	Thermoplastic Straight Running Chains SINGLE HINGE - 820 SERIES WRX 820 - WEAR RESISTANT POLYAMIDE COMPOSITE
46	Thermoplastic Straight Running Chains SINGLE HINGE - 820 SERIES AS 820 - ANTISTATIC ACETAL RESIN
46	Thermoplastic Straight Running Chains SINGLE HINGE - 820 SERIES PPB 820 - CHEMICAL RESISTANT REINFORCED POLYPROPYLENE
46	Thermoplastic Straight Running Chains SINGLE HINGE - 820 SERIES PBT 820 - EXTRA PERFORMANCE POLYESTER RESIN
47	Thermoplastic Straight Running Chains SINGLE HINGE - 831 SERIES REINFORCED TOP PLATE LFA 831 - LOW FRICTION ACETAL RESIN
47	Thermoplastic Straight Running Chains SINGLE HINGE - 831 SERIES REINFORCED TOP PLATE SP 831 - SUPER PERFORMANCE ACETAL RESIN
48	Thermoplastic Straight Running Chains SINGLE REINFORCED HINGE 828 SERIES - HIGH LOAD CAPACITY LFA 828 - LOW FRICTION ACETAL RESIN
48	Thermoplastic Straight Running Chains SINGLE REINFORCED HINGE 828 SERIES - HIGH LOAD CAPACITY SP 828 - SUPER PERFORMANCE ACETAL RESIN
48	Thermoplastic Straight Running Chains SINGLE REINFORCED HINGE 828 SERIES HIGH LOAD CAPACITY AK 828 - HIGH WEAR RESISTANT ACETAL RESIN
49	Thermoplastic Straight Running Chains SINGLE REINFORCED HINGE 8257 SERIES LFA 8257 - LOW FRICTION ACETAL RESIN
49	Thermoplastic Straight Running Chains SINGLE REINFORCED HINGE 8257 SERIES SP 8257 - SUPER PERFORMANCE ACETAL RESIN
50	Thermoplastic Straight Running Chains DOUBLE HINGE - 821 SERIES LFA 821 - LOW FRICTION ACETAL RESIN
50	Thermoplastic Straight Running Chains DOUBLE HINGE - 821 SERIES SP 821 - SUPER PERFORMANCE ACETAL RESIN
50	Thermoplastic Straight Running Chains DOUBLE HINGE - 821 SERIES PPB 821 - CHEMICAL RESISTANT REINFORCED POLYPROPYLENE
51	Thermoplastic Sideflexing Chains 880 BEVEL SERIES LFA 880 - LOW FRICTION ACETAL RESIN
51	Thermoplastic Sideflexing Chains 879 BEVEL SERIES LFA 879 - LOW FRICTION ACETAL RESIN
52	Thermoplastic Sideflexing Chains 880 TAB SERIES D 880 TAB - ACETAL RESIN
52	Thermoplastic Sideflexing Chains 880 TAB SERIES LFA 880 TAB - LOW FRICTION ACETAL RESIN
53	Thermoplastic Sideflexing Chains 880 TAB SERIES SP 880 TAB - SUPER PERFORMANCE ACETAL RESIN
53	Thermoplastic Sideflexing Chains 880 TAB SERIES AK 880 TAB - HIGH WEAR RESISTANT
53	Thermoplastic Sideflexing Chains 880 TAB SERIES AS 880 TAB - ANTISTATIC ACETAL RESIN
53	Thermoplastic Sideflexing Chains 880 TAB SERIES WRX 880 TAB - WEAR RESISTANT POLYAMIDE COMPOSITE
54	Thermoplastic Sideflexing Chains 880 TAB SERIES PPB 880 TAB - CHEMICAL RESISTANT REINFORCED POLYPROPYLENE
54	Thermoplastic Sideflexing Chains 880 TAB SERIES PBT 880 TAB - EXTRA PERFORMANCE POLYESTER RESIN
55	Thermoplastic Sideflexing Chains 879 TAB SERIES LFA 879 TAB - LOW FRICTION ACETAL RESIN
55	Thermoplastic Sideflexing Chains 879 TAB SERIES SP 879 TAB - SUPER PERFORMANCE ACETAL RESIN
56	Thermoplastic Sideflexing Chains 880 BO SERIES REDUCED SIDEFLEXING RADIUS R190 LFA 880 BO - LOW FRICTION ACETAL RESIN
56	Thermoplastic Sideflexing Chains 879 BO SERIES REDUCED SIDEFLEXING RADIUS R190 LFA 879 BO - LOW FRICTION ACETAL RESIN
57	Thermoplastic Sideflexing Chains 878 BO SERIES - REDUCED SIDEFLEXING RADIUS R190 LFA 878 BO - LOW FRICTION ACETAL RESIN
57	Thermoplastic Sideflexing Chains 878 BO SERIES - REDUCED SIDEFLEXING RADIUS R190 SP 878 BO - SUPER PERFORMANCE ACETAL RESIN
58	Thermoplastic Sideflexing Chains ON MAGNETIC TRACKS 880 M / 879 M SERIES / LFA 880 M LOW FRICTION ACETAL RESIN
58	Thermoplastic Sideflexing Chains ON MAGNETIC TRACKS 880 M / 879 M SERIES SP 880 M - SUPER PERFORMANCE ACETAL RESIN

Adeptrans Cadenas y Transmisiones S.L.

contents

page	model
58	Thermoplastic Sideflexing Chains ON MAGNETIC TRACKS 880 M / 879 M SERIES LFA 879 M - LOW FRICTION ACETAL RESIN
59	Thermoplastic Sideflexing Chains 882 TAB SERIES LFA 882 TAB - LOW FRICTION ACETAL RESIN
59	Thermoplastic Sideflexing Chains 882 TAB SERIES SP 882 TAB - SUPER PERFORMANCE ACETAL RESIN
59	Thermoplastic Sideflexing Chains 882 TAB SERIES - PPB 882 TAB CHEMICAL RESISTANT REINFORCED POLYPROPYLENE
60	Thermoplastic Sideflexing Chains 882 BEVEL SERIES LFA 882 - LOW FRICTION ACETAL RESIN
61	Thermoplastic Sideflexing Chains ON MAGNETIC TRACKS 882 M SERIES LFA 882 M - LOW FRICTION ACETAL RESIN
61	Thermoplastic Sideflexing Chains ON MAGNETIC TRACKS 882 M SERIES - SP 882 M SUPER PERFORMANCE ACETAL RESIN
62	Thermoplastic Straight Running Chains DOUBLE HINGE - LBP 821 SERIES LBP 821 - SUPER PERFORMANCE ACETAL RESIN
63	Thermoplastic Straight Running Chains SINGLE REINFORCED HINGE LBP 8257 SERIES SUPER PERFORMANCE ACETAL RESIN
64	Thermoplastic Sideflexing Chains LBP 882 TAB SERIES SUPER PERFORMANCE ACETAL RESIN
65	Thermoplastic Sideflexing Chains ON MAGNETIC TRACKS LBP 882 M SERIES SUPER PERFORMANCE ACETAL RESIN
66	Vacuum Thermoplastic Straight Running Chains 820 VACUUM SERIES LFA 820 VACUUM LOW FRICTION ACETAL RESIN
67	Vacuum Thermoplastic Sideflexing Chains 880 TAB VACUUM SERIES LFA 880 TAB VACUUM - LOW FRICTION ACETAL RESIN
68	Straight Running Chains WITH THERMOPLASTIC TOP PLATES - 843 SERIES - LFA 843 LOW FRICTION ACETAL RESIN
69	Straight Running Chains WITH THERMOPLASTIC TOP PLATES - 845 SERIES - LFA 845 LOW FRICTION ACETAL RESIN
70	Straight Running Chains WITH THERMOPLASTIC TOP PLATES - 863 SERIES - LFA 863 LOW FRICTION ACETAL RESIN
71	Straight Running Chains WITH THERMOPLASTIC TOP PLATES - 863 TAB SERIES LFA 863 TAB - LOW FRICTION ACETAL RESIN
72	Straight Running Chains WITH THERMOPLASTIC TOP PLATES - 963 SERIES LFA 963 - LOW FRICTION ACETAL RESIN
73	Sideflexing Chains WITH THERMOPLASTIC TOP PLATES - 1843 TAB SERIES LFA 1843 TAB - LOW FRICTION ACETAL RESIN
74	Sideflexing Chains WITH THERMOPLASTIC TOP PLATES - 1863 TAB SERIES LFA 1863 TAB - LOW FRICTION ACETAL RESIN
75	Sideflexing Chains WITH THERMOPLASTIC TOP PLATES - 1873 TAB SERIES LFA 1873 TAB - LOW FRICTION ACETAL RESIN
76	Thermoplastic Straight Running Chains WITH RUBBER INSERTS SINGLE HINGE - HFL 820 SERIES HFL 820 - HIGH FRICTION LINK
77	Thermoplastic Straight Running Chains WITH RUBBER INSERTS DOUBLE HINGE - HFL 821 SERIES HFL 821 - HIGH FRICTION LINK
78	Thermoplastic Sideflexing Chains WITH RUBBER INSERTS HFL 880 TAB SERIES - HFL 880 TAB HIGH FRICTION LINK
79	Thermoplastic Sideflexing Chains WITH RUBBER INSERTS - HFL 880 BO SERIES - HFL 880 BO HIGH FRICTION LINK
80	Thermoplastic Sideflexing Chains WITH RUBBER INSERTS - HFL 878 BO SERIES - HFL 878 BO - HIGH FRICTION LINK
81	Thermoplastic Sideflexing Chains WITH RUBBER INSERTS - HFL 882 TAB SERIES HIGH FRICTION LINK
82	Sideflexing Chains with Thermoplastic TOP PLATES AND RUBBER INSERTS - HFL 1873 TAB SERIES HIGH FRICTION LINK
83	Sideflexing Plastic Gripper Chains 1873 GS SERIES
84	Sideflexing Gripper Chains 1874 GV SERIES
85	Biplanar Thermoplastic Chains 1500 SERIES
86	Biplanar Thermoplastic Chains 1700 SERIES - LOW FRICTION ACETAL RESIN
86	Biplanar Thermoplastic Chains 1700 TAB SERIES - LOW FRICTION ACETAL RESIN
87	Biplanar Thermoplastic Chains WLF 1701 - LOW FRICTION ACETAL RESIN
87	Biplanar Thermoplastic Chains WLF 1701 TAB - LOW FRICTION ACETAL RESIN
88	Biplanar Thermoplastic Chains WLF 1702 - LOW FRICTION ACETAL RESIN
88	Biplanar Thermoplastic Chains WLF 1703 - LOW FRICTION ACETAL RESIN
89	Biplanar Thermoplastic Chains Accessories CHAIN PEGS
90	Case Conveyor Chains D 600 - D 600 TAB SERIES ACETAL RESIN
90	Case Conveyor Chains D 600 C - D 600 TAB C SERIES ACETAL RESIN
91	Case Conveyor Chains D 1400 - D 1400 TAB SERIES ACETAL RESIN
92	Thermoplastic Straight Running Conveyor Belts 720 SERIES - NEW PIN LOCK SYSTEM - LFA 720 - LOW FRICTION ACETAL RESIN

916 926 286 · info@adeptrans.es

page	model
92	Thermoplastic Straight Running Conveyor Belts - 720 SERIES NEW PIN LOCK SYSTEM SP 720 - SUPER PERFORMANCE ACETAL RESIN
93	Thermoplastic Straight Running Conveyor Belts 720 PT SERIES WITH TWO POSITIONERS - NEW PIN LOCK SYSTEM - SP 720 PT - LOW FRICTION ACETAL RESIN
93	Thermoplastic Straight Running Conveyor Belts 720 PT SERIES WITH TWO POSITIONERS - NEW PIN LOCK SYSTEM - SP 720 PT - SUPER PERFORMANCE ACETAL RESIN
94	Thermoplastic Straight Running Conveyor Belts 730 SERIES - NEW PIN LOCK SYSTEM - LFA 730 - LOW FRICTION ACETAL RESIN
94	Thermoplastic Straight Running Conveyor Belts 730 SERIES - NEW PIN LOCK SYSTEM - SP 730 - SUPER PERFORMANCE ACETAL RESIN
95	Thermoplastic Straight Running Conveyor Belts 730 PT SERIES WITH TWO POSITIONERS NEW PIN LOCK SYSTEM - LFA 730 PT - LOW FRICTION ACETAL RESIN
95	Thermoplastic Straight Running Conveyor Belts 730 PT SERIES WITH TWO POSITIONERS NEW PIN LOCK SYSTEM - SP 730 PT - SUPER PERFORMANCE ACETAL RESIN
96	Thermoplastic Sideflexing Chains LFA 780 TAB SERIES - LOW FRICTION ACETAL RESIN
96	Thermoplastic Sideflexing Chains SP 780 TAB SERIES - SUPER PERFORMANCE ACETAL RESIN
97	Thermoplastic Sideflexing Chains LFA 790 TAB SERIES - LOW FRICTION ACETAL RESIN
97	Thermoplastic Sideflexing Chains SP 790 TAB SERIES - SUPER PERFORMANCE ACETAL RESIN
98	Thermoplastic Sideflexing Chains ON MAGNETIC TRACKS 780 M SERIES - LFA 780 M LOW FRICTION ACETAL RESIN
98	Thermoplastic Sideflexing Chains ON MAGNETIC TRACKS - 780 M SERIES - SP 780 M - SUPER PERFORMANCE ACETAL RESIN
98	Thermoplastic Sideflexing Chains ON MAGNETIC TRACKS 780 M SERIES - WRX 780 M WEAR RESISTANT POLYAMIDE COMPOSITE
98	Thermoplastic Sideflexing Chains ON MAGNETIC TRACKS 780 M SERIES - AK 780 M - HIGH WEAR RESISTANT ACETAL RESIN
99	Thermoplastic Sideflexing Chains ON MAGNETIC TRACKS 790 M SERIES - LFA 790 M LOW FRICTION ACETAL RESIN
99	Thermoplastic Sideflexing Chains ON MAGNETIC TRACKS 790 M SERIES - SP 790 M - SUPER PERFORMANCE ACETAL RESIN
100	Thermoplastic Sideflexing Chains ON MAGNETIC TRACKS 780 MFG SERIES - LFA 780 MFG LOW FRICTION ACETAL RESIN
100	Thermoplastic Sideflexing Chains ON MAGNETIC TRACKS - 780 MFG SERIES - SP 780 MFG SUPER PERFORMANCE ACETAL RESIN
100	Thermoplastic Sideflexing Chains ON MAGNETIC TRACKS 780 MFG SERIES - WRX 780 MFG WEAR RESISTANT POLYAMIDE COMPOSITE
100	Thermoplastic Sideflexing Chains ON MAGNETIC TRACKS 780 MFG SERIES - AK 780 MFG HIGH WEAR RESISTANT ACETAL RESIN
101	Thermoplastic Sideflexing Chains 780 TAB FG SERIES - LFA 780 TAB FG - LOW FRICTION ACETAL RESIN
101	Thermoplastic Sideflexing Chains 780 TAB FG SERIES - SP 780 TAB FG - SUPER PERFORMANCE ACETAL RESIN
101	Thermoplastic Sideflexing Chains 780 TAB FG SERIES - WRX 780 TAB FG - WEAR RESISTANT POLYAMIDE COMPOSITE
101	Thermoplastic Sideflexing Chains 780 TAB FG SERIES - AK 780 TAB FG - HIGH WEAR RESISTANT ACETAL RESIN
102	Plastic Corrosion Resistance Table LEGEND
106	Magnetic Corner Tracks SELECTION TABLES
108	Magnetic Corner Tracks VERSION CM07 / CM06
109	Magnetic Corner Tracks VERSION CM10 / CM04
110	Magnetic Corner Tracks VERSION CM14 / CM01
111	Magnetic Corner Tracks VERSION CM02 / CM03
112	Magnetic Corner Tracks VERSION CM05B / CM05A
113	Magnetic Corner Tracks VERSION CM08 / CM42
114	Magnetic Corner Tracks VERSION CM09 / CM05C
115	Magnetic Corner Tracks VERSION CM05D / CM43
116	Magnetic Corner Tracks VERSION CMF06 / CM21A
117	Magnetic Corner Tracks VERSION CM22A / CM27
118	Magnetic Corner Tracks VERSION CM60 / CM61
119	Magnetic Corner Tracks VERSION CM62 / CM66
120	Magnetic Corner Tracks VERSION CM65 / CM81
121	Magnetic Corner Tracks VERSION CM85 / CM86
122	Magnetic Corner Tracks VERSION CM80 / CM91
123	Magnetic Corner Tracks VERSION CM93 / CM94
124	Magnetic Corner Tracks VERSION CM96 / CM97
125	Magnetic Corner Tracks VERSION CM98 / CMP68C
126	Magnetic Corner Tracks VERSION CMP02 / CMP861
127	Magnetic Corner Tracks VERSION CMP86C / CMP93C
128	Magnetic Corner Tracks VERSION CMP91 / CMP94C
129	Magnetic Corner Tracks VERSION CMP97C / CMP96C
130	Magnetic Corner Tracks VERSION CMP98C / CMB06
131	Magnetic Corner Tracks VERSION CMB07 / CMB04
132	Magnetic Corner Tracks VERSION CMB08 / CMB05D

contents

page	model
133	Magnetic Corner Tracks VERSION CMB22 / CMB27
135	Magnetic Corner Tracks VERSION CMC06 / CMC07
135	Magnetic Corner Tracks VERSION CMC04 / CMC08
136	Magnetic Corner Tracks VERSION CMC05D / CMC21
137	Magnetic Corner Tracks VERSION CMC22 / CMC27
138	Magnetic Corner Tracks RETURN GUIDE
142	Machined Sprockets 812 / 815 / 881 M SERIES
143	Machined Idler Wheels 812 / 815 / 881 M SERIES
144	Machined Idler Wheels 812 / 815 / 881 M SERIES
145	Injected Sprockets and Idler Wheels 812 / 815 / 881 M SERIES
146	Injected Sprockets and Idler Wheels 812 / 815 / 881 M SERIES
147	Injected Idler Wheels 812 / 815 / 881 M SERIES
148	Machined Sprockets 512 SERIES
149	Machined Idler Wheels 512 SERIES
150	Machined Sprockets 815 MINI SERIES
151	Machined Idler Wheels 815 MINI SERIES
153	Machined Sprockets 802 / 804 / 805 SERIES
154	Machined Idler Wheels 802 / 804 / 805 SERIES
155	Machined Idler Wheels 802 / 805 SERIES
156	Injected Sprockets and Idler Wheels 802 / 805 SERIES
157	Machined Sprockets 8127 / 8817 M SERIES
158	Machined Idler Wheels 8127 / 8817 M SERIES
160	Injected Sprockets and Idler Wheels 8127 / 8817 M SERIES
161	Machined Sprockets 881 / 8811 / 881TAB / 8811TAB / 8811R-TAB / 815TAB SERIES
162	Machined Idler Wheels 881 / 8811 / 881TAB / 8811TAB / 8811R-TAB / 815TAB SERIES
163	Machined Idler Wheels 881TAB / 8811TAB / 8811R-TAB / 815TAB SERIES
164	Machined Idler Wheels 881 / 8811 BEVEL SERIES
165	Injected Sprockets 881 / 8811 / 881TAB / 8811TAB SERIES
166	Injected Idler Wheels 881 / 8811 / 881TAB / 8811TAB / 8811R-TAB / 815 TAB SERIES
167	Injected Idler Wheels 881TAB / 8811TAB / 8811R-TAB / 815 TAB SERIES
167	Injected Idler Wheels 881 / 8811 / 8811M SERIES
169	Machined Sprockets 820 / 831 / LBP 831 SERIES
170	Machined Idler Wheels 820 / 831 / LBP 831 SERIES
172	Injected Sprockets and Idler Wheels 820 SERIES
173	Injected Sprockets 820 SERIES
174	Injected Idler Wheels 820 / 831 / LBP 831 SERIES
176	Machined Sprockets 821 / LBP 821 SERIES
177	Machined Idler Wheels 821 / LBP 821 SERIES
179	Injected Sprockets and Idler Wheels 821 / LBP 821 SERIES
182	Machined Sprockets 878 TAB / 879 / 879 TAB / 879 M / 880 / 880TAB / 880 M SERIES
183	Machined Idler Wheels 878 TAB / 879 / 879 TAB / 879 M / 880 / 880TAB / 880 M SERIES
184	Machined Idler Wheels 879 / 879 M / 880 / 880 M SERIES
185	Machined Idler Wheels 878 TAB / 879 TAB / 880 TAB SERIES
186	Injected Sprockets and Idler Wheels 878 TAB / 879 TAB / 880 TAB SERIES
187	Injected Idler Wheels 879 / 879 M / 880 / 880 M SERIES
188	Machined Sprockets 882 / 882 TAB / 882 M / 8257 / LBP8257 / LBP882M / LBP882 TAB SERIES
189	Machined Idler Wheels 882 / 882 TAB / 882 M / 8257 / LBP8257 / LBP882M / LBP882 TAB SERIES
190	Machined Idler Wheels 882 TAB / LBP882 TAB SERIES
191	Machined Idler Wheels 882 M / 8257 / LBP8257 / LBP882M SERIES
192	Injected Sprockets and Idler Wheels 882 / 882 TAB / 882 M / LBP 8257 SERIES
191	Injected Idler Wheels 882 M / 8257 / LBP 8257 / LBP 882 M SERIES
194	Injected Sprockets and Idler Wheels 780 M / 780 MFG / 780 TAB / 780 FG TAB / 790 M / 790 TAB SERIES
195	Machined Sprockets 780 M / 780 MFG / 780 TAB / 780 FG TAB / 790 TAB SERIES
195	Machined Sprockets and Idler Wheels 1500 / 1700 / 1701 / 1702 / 1703 SERIES
197	Injected Sprockets and Idler Wheels 1500 / 1700 / 1701 / 1702 / 1703 SERIES
198	Machined Sprockets and Idler Wheels 1500 / 1700 / 1701 / 1702 / 1703 SERIES
198	Machined Sprockets and Idler Wheels 600 SERIES
199	Machined Sprockets and Idler Wheels 1400 SERIES
200	Machined Sprockets and Idler Wheels 720 / 720 PT SERIES
201	Injected Sprockets and Idler Wheels 720 / 720 PT SERIES
202	Machined Sprockets and Idler Wheels 730 / 730 PT SERIES
203	Injected Sprockets and Idler Wheels 730 / 730 PT SERIES

page	model
204	Key Seat Tolerance and Dimensions UNI 6604-69 / ISO773 / DIN6885
208	Injected Tangential Sprockets 878BO / 879 BO / 880BO SERIES
210	Cast Iron Sprockets 812 / 815 SERIES 820 / 831 SERIES
211	Cast Iron Sprockets 881 / 8811 SERIES 802 / 804 / 821 SERIES
212	Cast Iron Sprockets 878 / 879 / 880 SERIES 882 SERIES
213	Cast Iron Sprockets 600 SERIES 1500 / 1700... SERIES
214	Standard Sprockets 843 / 845 / 1843 SERIES 863 / 963 / 1863 / 1864 / 1873 / 1874
215	Block Body Machined STEEL SPROCKETS
218	Sideflexing Guides for TAB Type Chains 780 / 790 / 878 / 879 / 880 / 881 / 8811 SERIES
219	Sideflexing Guides for TAB Type Chains 780 / 790 / 878 / 879 / 880 / 881 / 8811 SERIES
220	Sideflexing Guides for BEVEL 8° Type Chains 879 / 880 / 881 / 8811 SERIES
221	Sideflexing Guides for BEVEL 8° Type Chains 879 / 880 / 881 / 8811 SERIES
222	Sideflexing Guides for TAB Type Chains 882 TAB / LBP 882 TAB SERIES
223	Sideflexing Guides For Chains 882 TAB / 882 BEVEL SERIES
224	Sideflexing Guides for BEVEL 8° Type Chains 882 SERIES
225	Sideflexing Guides for TAB Type Chains 1863 / 1873 / 1874 SERIES
226	Sideflexing Guides for TAB Type Chains 1863 / 1873 / 1874 SERIES 1843 SERIES
226	Sideflexing Guides for TAB Type Chains 1843 SERIES
227	Sideflexing Guides for TAB Type Chains 1863 / 1873 / 1874 SERIES
227	Sideflexing Guides for Chains 1500 / 1700... SERIES
228	Straight Guides for TAB Type Chains 780 TAB / 790 TAB / 880 TAB / 881 TAB / 8811 TAB / 882 TAB / 1843 TAB / 1863 TAB / 1873 TAB / 1874 TAB SERIES
229	Straight Guides for Bevel 8° Type Chains 879 / 880 / 881 / 8811 / 882 SERIES
230	Guides for Straight Running Type Chains 812 / 815 / 8127 / 802 / 8811M / 8817M / 820 / 828 / 8257 / 821 / 879M / 880M / 882M / 720 / 730 / 780M / 790M SERIES
231	Straight Guides for Biplanar Type Chains 1500 / 1700 / 1700TAB / 1701TAB SERIES
232	Guide Rail Profiles for Conveyor Chains
235	Metal Profiles
236	Conveyor Belts / Conveyor Design
240	Chain Sizing

general conditions of sale

of Magris Srl Makes Moving, limited company established according to the Italian law, hereafter called “Magris” or “Seller”.

1. GENERAL
These conditions shall apply to all sales of Magris.
These conditions prevail on different conditions contained in any documents (purchase orders, invoices etc..) of a customer or sales lead, therefore these different conditions will not be binding on Magris. Any deviation from these conditions or from part of them will be valid only with the Magris written consent.
In case the original Italian text does not coincide with this English translation, the Italian text will be binding and deciding.
These conditions consider all rights and obligations of the parts, and if it is necessary, they will replace every previous written or oral proposal and information pertaining to these conditions.
If one or more regulations of these conditions will be invalidated, all the other regulation will remain integrally effective. The invalidated regulations will be replaced from other regulations which correspond as closed as possible with the intentions of the parties.

2. ACCEPTANCE AND PRICE
The offers will be valid till 30 days, except for agreed extended deadline, and they are valid only for the offered quantities. Purchase orders for shipments with total amount lower than the minimum amount for each shipment mentioned in all our offers will not be accepted.
The sundry expenses for covering any unplanned inconvenience or other unusual expenses will be debited and included without limitation: overtime authorized from the buyer, special packaging, drawing execution and documentation.
The prices showed in EURO do not include transport charges, packaging, insurance, duties, VAT and all similar taxes. All purchase orders must be accepted from Magris.
The price lists can be modified depending on the market demand or because of the increase of the labour and/or the raw materials costs, also without having previously informed the customer.These conditions consider all rights and obligations of the parts, and if it is necessary, they will replace every previous written or oral proposal and information pertaining to these conditions.

If one or more regulations of these conditions will be invalidated, all the other regulation will remain integrally effective. The invalidated regulations will be replaced from other regulations which correspond as closed as possible with the intentions of the parties.

3. MINIMUM INVOICING AMOUNT
The minimum invoicing amount for the national sales is of EUR 250,00 (excluding VAT), otherwise it will be debited EUR 6,00 for invoicing expenses. The minimum invoicing amount for Intra- and Extra-CEE sales is of EUR 500,00, otherwise it will be debited EUR 30,00 for Intra-CEE transactions and EUR 45,00 for Extra-CEE transactions (except for modifications and/or updates that will be communicated before from our sales department).

4. PACKAGING
Magris shall decide how to pack the goods unless different written instructions were given by the Buyer and accepted by the Seller, in this case Magris can charge the buyer for the extra expenses. The packing disposal is at consignee’s expenses.

5. QUANTITY
For purchase orders of items which are not produced by Magris the quantities written in the offers and in the order confirmations could vary.

6. DESIGNS, DIMENSIONS AND WEIGHTS
Because of normal product changes the designs, dimensions, materials, components and weights shown in all printed and electronic catalogues could vary.

7. DELIVERY
All the transport costs will be charged to the customer unless differently agreed. Magris is not responsible for the contract terms of shipment or damage or loss of the products after delivery to the forwarder. If the Buyer has a claim against the forwarder, Magris shall cooperate in attempting to secure an adjustment when requested.
In case of defects, shortage or any other claim concerning the delivered goods must be proved within 30 days from the goods acceptance, on pain of decay. In case of delay in deliveries, Magris will not accept to pay any compensation and the goods will not be delivered carriage free unless this was previously agreed.

8. RESERVE AND PROPERTY TRANSFER
The property of the delivered goods shall remains of Magris till the Buyer will pay the total amount for them, as well all interests and costs related to the delivered or deliverable goods. During this period the Buyer will be responsible for the maintenance and care of the goods.
The delivered goods will remain property of Magris till the Buyer will totally pay all the other amounts that the Buyer must pay to the Seller.
Till the property transfer the Seller has the right to recover goods that belong to Magris and that the Seller holds or holds control on them.
The Seller will have the right to access to any area or building where the goods are located in order to pick up these goods.
If the Buyer elaborates the goods that have not been paid and transforms them in a new object or combines them with another object, Magris will own the new object proportionally to the value that the goods that have not been paid will take on the new object, till the Seller will receive the complete payment of the original goods.
If the Buyer sells the goods that have not been paid or the new object assigns to Magris a part of his claim toward a third party corresponding to the debit related to the goods that have not been paid/to the new object which have been sold.

9. FORCE MAJEURE
Magris could be unable to keep the delivery time indicated in their order confirmations due to circumstances beyond its control, such as delays in the delivery of goods from the supplier/s, machinery breakdown, delays of the raw materials deliveries, calamities, unusual weather conditions, closing for holidays, governmental measures, uprisings, danger risk and industrial actions or strikes.

10. RIGHT OF WITHDRAWAL
If the Buyer withdraw from the sale contract before the delivery of the goods, the Seller will debit to the customer the costs related to studies, drawings, materials etc., which Magris had incurred before receiving the written communication of withdrawal.

11. TERMS OF PAYMENT, NON-FULFILMENT AND RIGHT OF SUSPENSION
All orders are subjected to credit approval by Magris. The Buyer must pay within the payment term shown in the invoice, unless differently specified in the order confirmation. In case the Buyer does not fulfil the above point he will be automatically in default and will be debited with the current legal interests that will be calculated on the total amount of the invoice and that will start from the due date of the invoice.
Furthermore all the costs for the recovery of the extra trial expenses will be charged to the Buyer and they will be calculated on the highest prices provided for the Bar Association.
If the Buyer will be in default of just one of the obligation in behalf of

general conditions of sale

Magris and derived from any negotiations, or if Magris will reasonably believe that the Buyer will never fulfil just one of the obligations in the future (for example in case the Buyer becomes bankrupt, or he requires a receivership, sell or liquidate his company, or one or more of his goods will be distrained), Magris has the right to:

a. ask for payment in advance, or another guarantee for the payment, or ask for payment at delivery;
b. suspend the delivery without effecting the Magris right of asking for a guarantee of payment immediate or in a later time;
c. not to confirm totally or partially the next orders and change the delivery terms and/or the payment terms.

The above points do not affect the right of Magris in asking for the payment and for the compensation for damages.

12. RETURN OF THE DELIVERED GOODS (INTACT AND IN THE ORIGINAL PACKAGING)

The Buyer shall deliver the request of authorization for returning the goods within 30 days from the original shipping date, the returned items and the reason why they are returned will be specified in this request. It must be signed by Magris for acceptance.
The request for returning the goods will not be accepted for material on drawings or on specific request.
The Buyer will pay the transport charges from his warehouse till Magris's premises. The Seller will debit to the customer the 15% of the total amount of the returned goods (for national returned goods the minimum is EUR 150,00, for international goods the minimum is EUR 250,00) in order to cover the costs for the storage/ quality and administration.
The goods will be returned within 30 days from the authorization date. Magris will not issue credit notes for goods that had been returned without authorization.

13. NOTIFICATION OF THE CLAIMS

The Buyer will put in writing every claim related to delivered goods and he will notify it within 30 days from the date of dispatch. The notifications of the claims do not dismiss the Buyer from paying.

14. DEFECTS AFTER DELIVERY

Unless otherwise specified in the contract Magris guarantees the full and free property and the right of full and free use of the goods, furthermore guarantees that the goods produced by the Seller and/ or by its affiliate comply with the technical specification given from the Seller and that they do not have materials or manufacturing defects. Magris guarantees that the service supply from the Seller or from its affiliates will be accomplished with skill, care and accuracy, according to the rules of the engineering field. Magris can discretionary decide whether repairing or replacing one or more spare parts in order to eliminate any defects which come from the normal use, care and maintenance of the goods produced by the affiliates of Magris and communicated to the Seller within 12 solar months from the purchase date and that come out of defected manufacturing or material: the Buyer shall always return the defective items to the Seller within the guaranty period paying the transport and the insurance costs. The replacements will become of the Seller's property. Magris will arrange the delivery of the repaired or replaced parts to the Buyer premises in Italy, or in case the Buyer is not based in Italy the parts will be delivered FCA (free carrier) in Italy. The Seller will correct the defects verified in the services supplied by the Seller or by its affiliates. The defects must be reported to the Seller within ninety days from the fulfilment of these services. The repaired, replaced or corrected services according to this point will benefit from the above-mentioned guaranty for the period of time which comes last between: the remaining time of the guaranty period or ninety days starting from the date in which they have been given back to the Buyer (in case of services it will be the date in which they were completed or corrected). The products or the services which the Seller brought from a third party (in case they are not affiliated to the Seller) when they are resell to the Buyer they will be subjected only to the guaranty of the primal manufacturer.
Despite all things said at the previous points, Magris shall not be liable for defects caused by: normal wear; materials or manufacturing or assembly processes made, supplied or specified from the Buyer; non-compliance of the Seller's instructions on the conservation, installation, usage or environmental requirements; lack of proper maintenance; any modification or reparation not previously approved in writing by the Seller; use of software or non authorized replacements. The costs for investigating, verifying and correcting these defects paid by Magris will be reimbursed from the Buyer on request. In any case the Buyer will be entirely liable for the accuracy and the adequacy of the information he provided.
Except for point no. XIV, all general conditions described in this document are the unique guaranty given by the Seller, and it is the only enforceable remedy from the Buyer in order to apply the guaranty. Any further declaration, guaranty or condition, explicit or implicit, will not been enforced referring to the good quality, commerciability, ability for any specific use or any other aspects related to any other goods or services.

15. LIABILITY

The total liability of Magris and its affiliates for any damage, claim or action (included just as an example damages, claims or rights derived from unlawful act, breach of contract or legal obligation, negligence, objective liability or infringement of the intellectual property rights), cannot be more than the contractual price. The Seller and its affiliates are not liable in no case towards the Buyer for profit loss, contractual opportunities, use of assets, information or data, nor of any resulting damage or direct or indirect loss for any loss or damage, in any way appeared, activate against or suffered from the Buyer.
The Buyer hereby undertakes to indemnify Magris from any damages sustained by a third Party and derived from defects of the delivered goods, from wrong uses or for any other reasons.

16. CONTROVERSY AND COMPETENT COURT

Any controversy between the Buyer and Magris will be handled exclusively by the competent court of Treviso - ITALY.

MAGRIS SRL MAKES MOVING
Via Vanizza 10
31025 S.Lucia di Piave (TV)
ITALY